Chapter 14, Problem 1.

Find the transfer function $\mathbf{V}_o/\mathbf{V}_i$ of the *RC* circuit in Fig. 14.68. Express it using $\omega_o = 1/RC$.

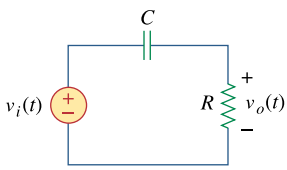

Figure 14.68
For Prob. 14.1.

Chapter 14, Solution 1.

$$\mathbf{H}(\omega) = \frac{\mathbf{V}_o}{\mathbf{V}_i} = \frac{R}{R + 1/j\omega C} = \frac{j\omega RC}{1 + j\omega RC}$$

$$\mathbf{H}(\omega) = \underline{\frac{\mathbf{j\omega/\omega_0}}{\mathbf{1 + j\omega/\omega_0}}}, \qquad \text{where } \underline{\boldsymbol{\omega_0} = \frac{\mathbf{1}}{\mathbf{RC}}}$$

$$H = \left|\mathbf{H}(\omega)\right| = \frac{\omega/\omega_0}{\sqrt{1 + (\omega/\omega_0)^2}} \qquad \phi = \angle\mathbf{H}(\omega) = \frac{\pi}{2} - \tan^{-1}\left(\frac{\omega}{\omega_0}\right)$$

This is a highpass filter. The frequency response is the same as that for P.P.14.1 except that $\omega_0 = 1/RC$. Thus, the sketches of H and ϕ are shown below.

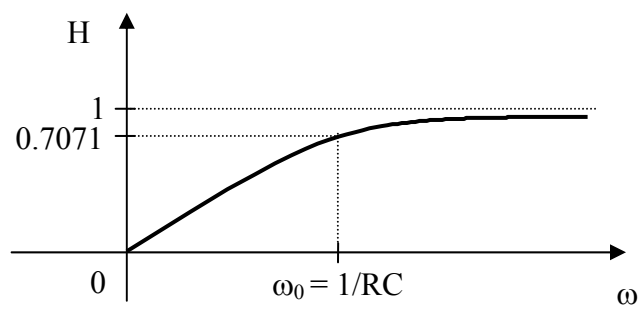

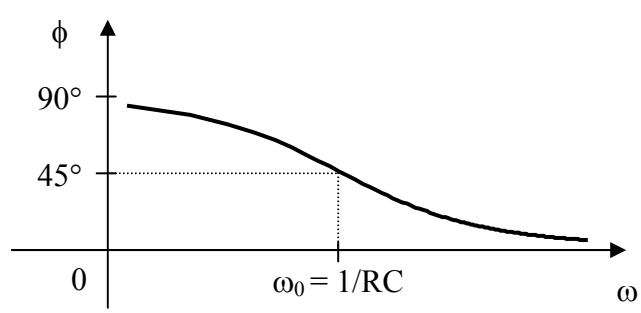

PROPRIETARY MATERIAL. © 2007 The McGraw-Hill Companies, Inc. All rights reserved. No part of this Manual may be displayed, reproduced or distributed in any form or by any means, without the prior written permission of the publisher, or used beyond the limited distribution to teachers and educators permitted by McGraw-Hill for their individual course preparation. If you are a student using this Manual, you are using it without permission.

Chapter 14, Problem 2.

Obtain the transfer function $\mathbf{V}_o(s)/\mathbf{V}_i$ of the circuit in Fig. 14.69.

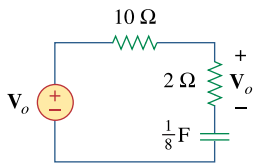

Figure 14.69
For Prob. 14.2.

Chapter 14, Solution 2.

$$H(s) = \frac{V_o}{V_i} = \frac{2 + \dfrac{1}{s/8}}{10 + 20 + \dfrac{1}{s/8}} = \frac{2 + 8/s}{12 + 8/s} = \underline{\frac{1}{6}\frac{s+4}{s+0.6667}}$$

PROPRIETARY MATERIAL. © 2007 The McGraw-Hill Companies, Inc. All rights reserved. No part of this Manual may be displayed, reproduced or distributed in any form or by any means, without the prior written permission of the publisher, or used beyond the limited distribution to teachers and educators permitted by McGraw-Hill for their individual course preparation. If you are a student using this Manual, you are using it without permission.

Chapter 14, Problem 3.

For the circuit shown in Fig. 14.70, find $\mathbf{H}(s) = \mathbf{V}_o / \mathbf{V}_i(s)$.

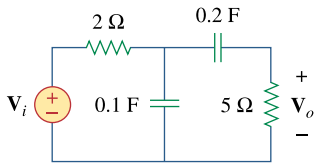

Figure 14.70
For Prob. 14.3.

Chapter 14, Solution 3.

$$0.2F \longrightarrow \frac{1}{j\omega C} = \frac{1}{s(0.2)} = \frac{5}{s}$$

$$0.1F \longrightarrow \frac{1}{s(0.1)} = \frac{10}{s}$$

The circuit becomes that shown below.

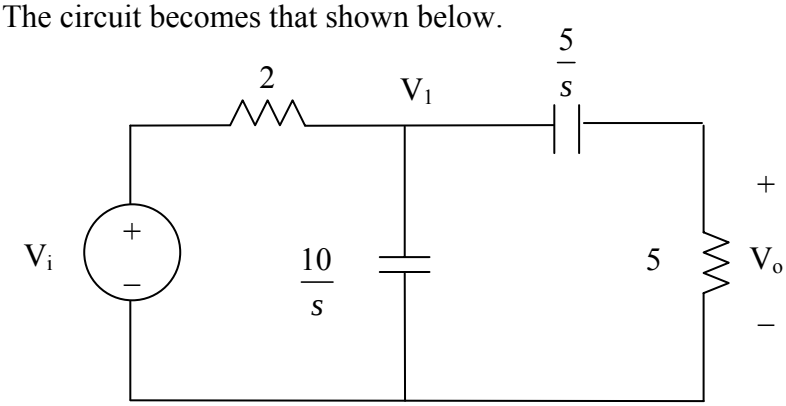

$$\text{Let } Z = \frac{10}{s} // (5 + \frac{5}{s}) = \frac{\frac{10}{s}(5+\frac{5}{s})}{5+\frac{15}{s}} = \frac{\frac{10}{s}5(\frac{1+s}{s})}{\frac{5}{s}(3+s)} = \frac{10(s+1)}{s(s+3)}$$

$$V_1 = \frac{Z}{Z+2}V_i$$

$$V_o = \frac{5}{5+5/s}V_1 = \frac{s}{s+1}V_1 = \frac{s}{s+1} \bullet \frac{Z}{Z+2}V_i$$

$$H(s) = V_o / V_i = \frac{s}{s+1} \bullet \frac{\frac{10(s+1)}{s(s+3)}}{2+\frac{10(s+1)}{s(s+3)}} = \frac{10s}{2s(s+3)+10(s+1)} = \frac{5s}{s^2+8s+5}$$

PROPRIETARY MATERIAL. © 2007 The McGraw-Hill Companies, Inc. All rights reserved. No part of this Manual may be displayed, reproduced or distributed in any form or by any means, without the prior written permission of the publisher, or used beyond the limited distribution to teachers and educators permitted by McGraw-Hill for their individual course preparation. If you are a student using this Manual, you are using it without permission.

Chapter 14, Problem 4.

Find the transfer function $\mathbf{H}(\omega) = \mathbf{V}_O/\mathbf{V}_i$ of the circuits shown in Fig. 14.71.

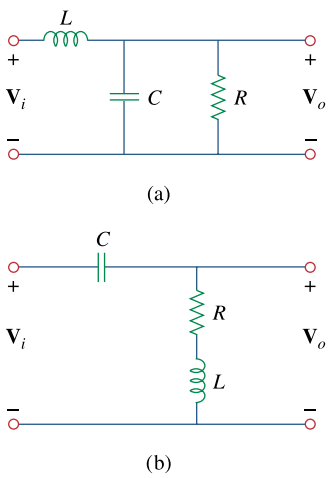

Figure 14.71
For Prob. 14.4.

Chapter 14, Solution 4.

(a) $$R \parallel \frac{1}{j\omega C} = \frac{R}{1 + j\omega RC}$$

$$\mathbf{H}(\omega) = \frac{\mathbf{V}_o}{\mathbf{V}_i} = \frac{\dfrac{R}{1 + j\omega RC}}{j\omega L + \dfrac{R}{1 + j\omega RC}} = \frac{R}{R + j\omega L(1 + j\omega RC)}$$

$$\mathbf{H}(\omega) = \underline{\frac{\mathbf{R}}{\mathbf{-\omega^2 RLC + R + j\omega L}}}$$

(b) $$\mathbf{H}(\omega) = \frac{R + j\omega L}{R + j\omega L + 1/j\omega C} = \frac{j\omega C(R + j\omega L)}{1 + j\omega C(R + j\omega L)}$$

$$\mathbf{H}(\omega) = \underline{\frac{\mathbf{-\omega^2 LC + j\omega RC}}{\mathbf{1 - \omega^2 LC + j\omega RC}}}$$

PROPRIETARY MATERIAL. © 2007 The McGraw-Hill Companies, Inc. All rights reserved. No part of this Manual may be displayed, reproduced or distributed in any form or by any means, without the prior written permission of the publisher, or used beyond the limited distribution to teachers and educators permitted by McGraw-Hill for their individual course preparation. If you are a student using this Manual, you are using it without permission.

Chapter 14, Problem 5.

For each of the circuits shown in Fig. 14.72, find $\mathbf{H}(s) = \mathbf{V}_o(s)/\mathbf{V}_s(s)$.

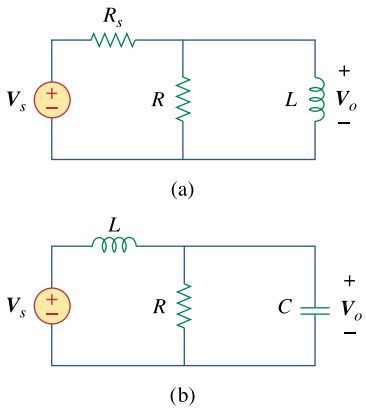

Figure 14.72
For Prob. 14.5.

Chapter 14, Solution 5.

(a) Let $Z = R // sL = \dfrac{sRL}{R + sL}$

$$V_o = \frac{Z}{Z + R_s} V_s$$

$$H(s) = \frac{V_o}{V_s} = \frac{Z}{Z + R_s} = \frac{\dfrac{sRL}{R + sL}}{R_s + \dfrac{sRL}{R + sL}} = \underline{\frac{sRL}{RR_s + s(R + R_s)L}}$$

(b) Let $Z = R // \dfrac{1}{sC} = \dfrac{Rx\dfrac{1}{sC}}{R + \dfrac{1}{sC}} = \dfrac{R}{1 + sRC}$

$$V_o = \frac{Z}{Z + sL} V_s$$

$$\mathrm{H(s)} = \frac{\mathrm{V_o}}{\mathrm{V_i}} = \frac{\mathrm{Z}}{\mathrm{Z + sL}} = \frac{\dfrac{\mathrm{R}}{\mathrm{1 + sRC}}}{\mathrm{sL} + \dfrac{\mathrm{R}}{\mathrm{1 + sRC}}} = \underline{\frac{\mathrm{R}}{\mathrm{s^2LRC + sL + R}}}$$

PROPRIETARY MATERIAL. © 2007 The McGraw-Hill Companies, Inc. All rights reserved. No part of this Manual may be displayed, reproduced or distributed in any form or by any means, without the prior written permission of the publisher, or used beyond the limited distribution to teachers and educators permitted by McGraw-Hill for their individual course preparation. If you are a student using this Manual, you are using it without permission.

Chapter 14, Problem 6.

For the circuit shown in Fig. 14.73, find $\mathbf{H}(s) = \mathbf{I}_o(s)/\mathbf{I}_s(s)$.

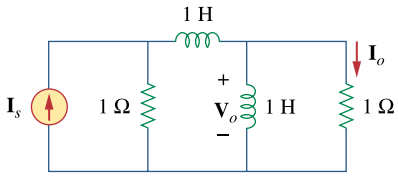

Figure 14.73
For Prob. 14.6.

Chapter 14, Solution 6.

$$1H \longrightarrow j\omega L = sL = s$$

Let $Z = s//1 = \dfrac{s}{s+1}$

We convert the current source to a voltage source as shown below.

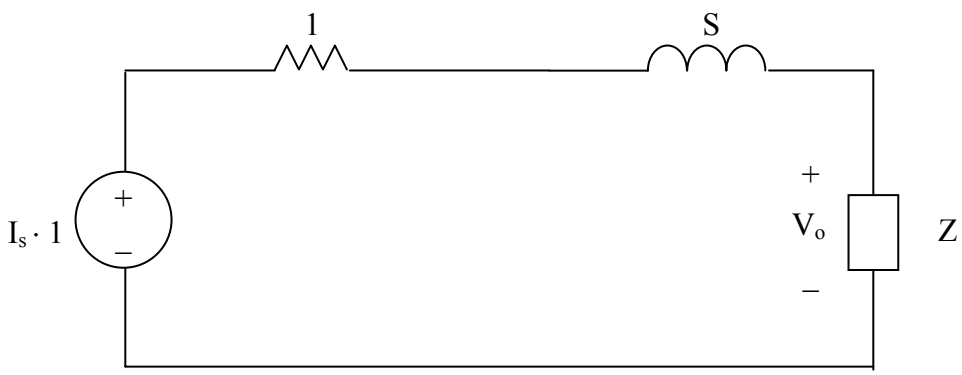

$$V_o = \frac{Z}{Z+s+1}(I_s x 1) = \frac{\dfrac{s}{s+1}}{s+1+\dfrac{s}{s+1}} I_s = \frac{sI_s}{(s+1)^2+s} = \frac{sI_s}{s^2+3s+1}$$

$$I_o = \frac{V_o}{1} = \frac{sI_s}{s^2+3s+1}$$

$$H(s) = \frac{I_o}{I_s} = \frac{s}{s^2+3s+1}$$

PROPRIETARY MATERIAL. © 2007 The McGraw-Hill Companies, Inc. All rights reserved. No part of this Manual may be displayed, reproduced or distributed in any form or by any means, without the prior written permission of the publisher, or used beyond the limited distribution to teachers and educators permitted by McGraw-Hill for their individual course preparation. If you are a student using this Manual, you are using it without permission.

Chapter 14, Problem 7.

Calculate $|\mathbf{H}(\omega)|$ if H_{dB} equals

(a) 0.05dB (b) -6.2 dB (c) 104.7 dB

Chapter 14, Solution 7.

(a) $0.05 = 20\log_{10} \text{H}$

$2.5\times10^{-3} = \log_{10} \text{H}$

$\text{H} = 10^{2.5\times10^{-3}} = \underline{\mathbf{1.005773}}$

(b) $-6.2 = 20\log_{10}\text{H}$

$-0.31 = \log_{10}\text{H}$

$\text{H} = 10^{-0.31} = \underline{\mathbf{0.4898}}$

(c) $104.7 = 20\log_{10} \text{H}$

$5.235 = \log_{10} \text{H}$

$\text{H} = 10^{5.235} = \underline{\mathbf{1.718\times10^5}}$

Chapter 14, Problem 8.

Determine the magnitude (in dB) and the phase (in degrees) of $\mathbf{H}(\omega) =$ at $\omega = 1$ if $\mathbf{H}(\omega)$ equals

(a) 0.05 dB (b) 125 (c) $\dfrac{10j\omega}{2+j\omega}$ (d) $\dfrac{3}{1+j\omega} + \dfrac{6}{2+j\omega}$

Chapter 14, Solution 8.

(a) $\text{H} = 0.05$

$\text{H}_{\text{dB}} = 20\log_{10} 0.05 = \underline{\mathbf{-26.02}}$, $\phi = \underline{\mathbf{0°}}$

(b) $\text{H} = 125$

$\text{H}_{\text{dB}} = 20\log_{10} 125 = \underline{\mathbf{41.94}}$, $\phi = \underline{\mathbf{0°}}$

(c) $\text{H}(1) = \dfrac{\text{j}10}{2+\text{j}} = 4.472\angle 63.43°$

$\text{H}_{\text{dB}} = 20\log_{10} 4.472 = \underline{\mathbf{13.01}}$, $\phi = \underline{\mathbf{63.43°}}$

(d) $\text{H}(1) = \dfrac{3}{1+\text{j}} + \dfrac{6}{2+\text{j}} = 3.9 - \text{j}2.7 = 4.743\angle -34.7°$

$\text{H}_{\text{dB}} = 20\log_{10} 4.743 = \underline{\mathbf{13.521}}$, $\phi = \underline{\mathbf{-34.7°}}$

PROPRIETARY MATERIAL. © 2007 The McGraw-Hill Companies, Inc. All rights reserved. No part of this Manual may be displayed, reproduced or distributed in any form or by any means, without the prior written permission of the publisher, or used beyond the limited distribution to teachers and educators permitted by McGraw-Hill for their individual course preparation. If you are a student using this Manual, you are using it without permission.

Chapter 14, Problem 9.

A ladder network has a voltage gain of

$$\mathbf{H}(\omega) = \frac{10}{(1+j\omega)(10+j\omega)}$$

Sketch the Bode plots for the gain.

Chapter 14, Solution 9.

$$\mathbf{H}(\omega) = \frac{1}{(1+j\omega)(1+j\omega/10)}$$

$$H_{dB} = -20\log_{10}|1+j\omega| - 20\log_{10}|1+j\omega/10|$$

$$\phi = -\tan^{-1}(\omega) - \tan^{-1}(\omega/10)$$

<u>The magnitude and phase plots are shown below</u>.

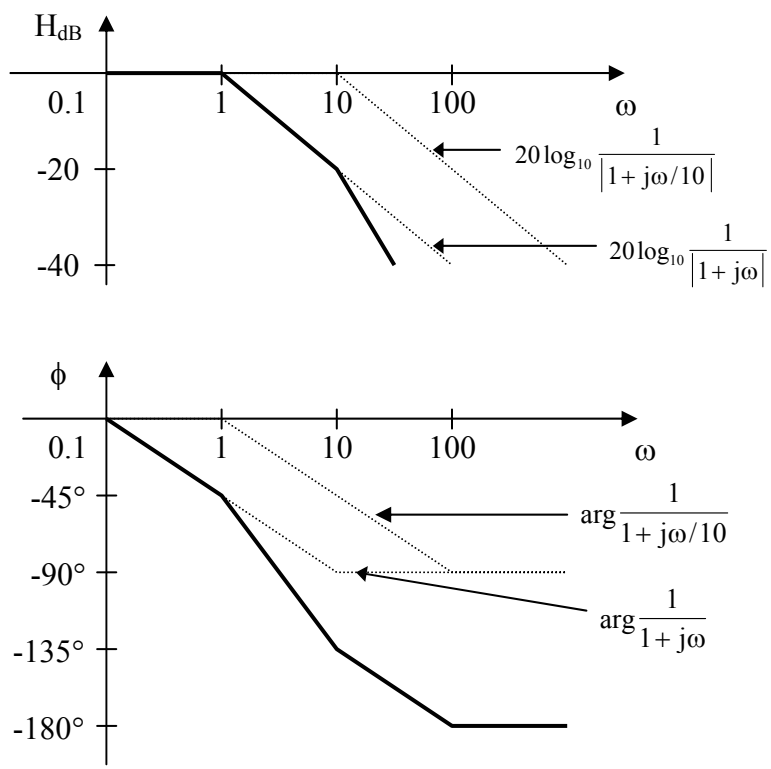

<u>PROPRIETARY MATERIAL</u>. © 2007 The McGraw-Hill Companies, Inc. All rights reserved. <u>No part of this Manual may be displayed, reproduced or distributed in any form or by any means, without the prior written permission of the publisher, or used beyond the limited distribution to teachers and educators permitted by McGraw-Hill for their individual course preparation. If you are a student using this Manual, you are using it without permission.</u>

Chapter 14, Problem 10.

Sketch the Bode magnitude and phase plots of:

$$\mathbf{H}(j\omega) = \frac{50}{j\omega(5 + j\omega)}$$

Chapter 14, Solution 10.

$$H(j\omega) = \frac{50}{j\omega(5 + j\omega)} = \frac{10}{1j\omega\left(1 + \frac{j\omega}{5}\right)}$$

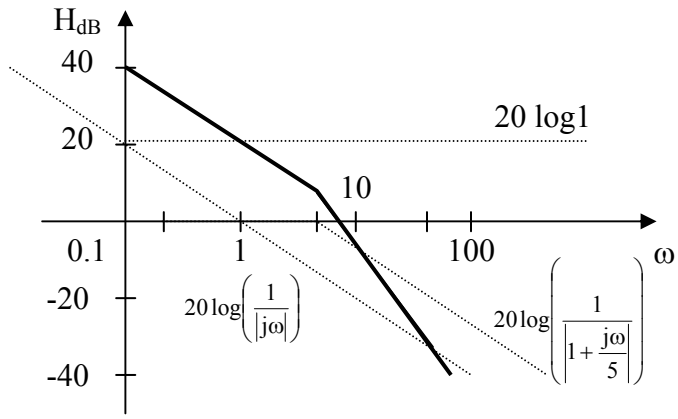

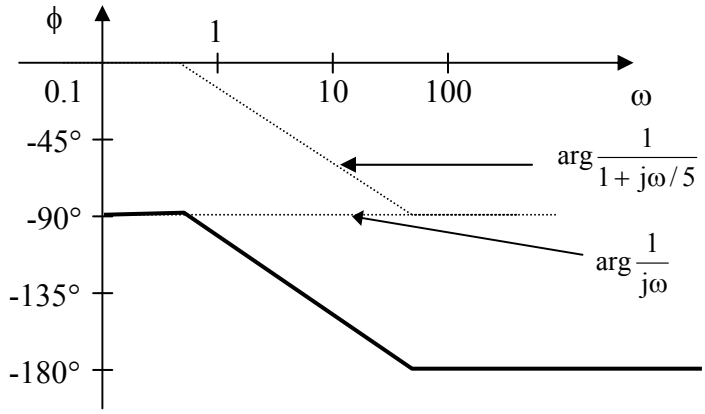

PROPRIETARY MATERIAL. © 2007 The McGraw-Hill Companies, Inc. All rights reserved. No part of this Manual may be displayed, reproduced or distributed in any form or by any means, without the prior written permission of the publisher, or used beyond the limited distribution to teachers and educators permitted by McGraw-Hill for their individual course preparation. If you are a student using this Manual, you are using it without permission.

Chapter 14, Problem 11.

Sketch the Bode plots for

$$\mathbf{H}(\omega) = \frac{10 + j\omega}{j\omega(2 + j\omega)}$$

Chapter 14, Solution 11.

$$\mathbf{H}(\omega) = \frac{5(1 + j\omega/10)}{j\omega(1 + j\omega/2)}$$

$$H_{dB} = 20\log_{10} 5 + 20\log_{10}\left|1 + j\omega/10\right| - 20\log_{10}\left|j\omega\right| - 20\log_{10}\left|1 + j\omega/2\right|$$

$$\phi = -90° + \tan^{-1}\omega/10 - \tan^{-1}\omega/2$$

<u>The magnitude and phase plots are shown below</u>.

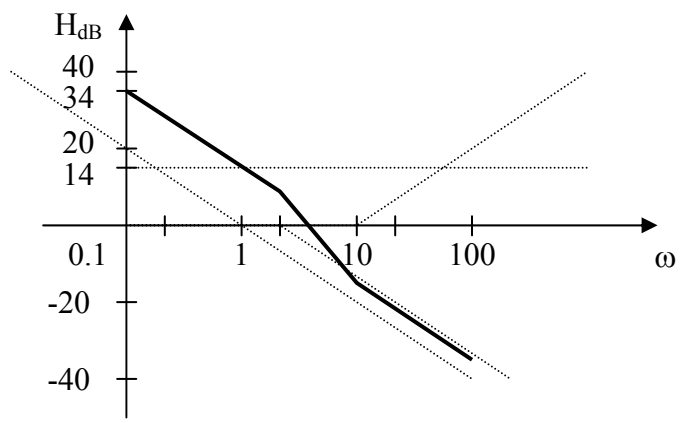

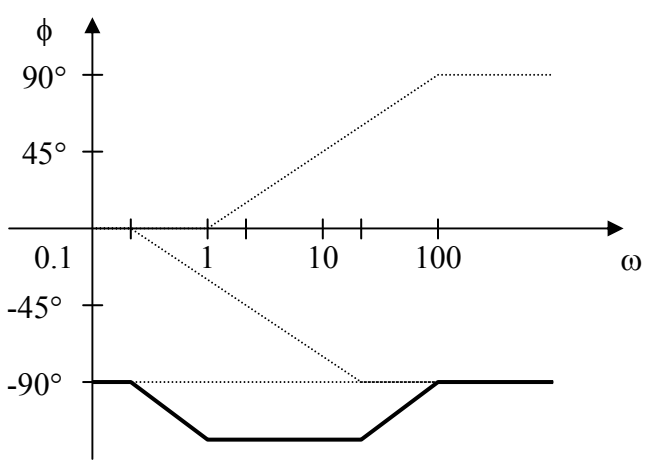

<u>PROPRIETARY MATERIAL</u>. © 2007 The McGraw-Hill Companies, Inc. All rights reserved. <u>No part of this Manual may be displayed, reproduced or distributed in any form or by any means, without the prior written permission of the publisher, or used beyond the limited distribution to teachers and educators permitted by McGraw-Hill for their individual course preparation. If you are a student using this Manual, you are using it without permission.</u>

Chapter 14, Problem 12.

A transfer function is given by

$$T(s) = \frac{s+1}{s(s+10)}$$

Sketch the magnitude and phase Bode plots.

PROPRIETARY MATERIAL. © 2007 The McGraw-Hill Companies, Inc. All rights reserved. No part of this Manual may be displayed, reproduced or distributed in any form or by any means, without the prior written permission of the publisher, or used beyond the limited distribution to teachers and educators permitted by McGraw-Hill for their individual course preparation. If you are a student using this Manual, you are using it without permission.

Chapter 14, Solution 12.

$$T(w) = \frac{0.1(1 + j\omega)}{j\omega(1 + j\omega/10)}, \qquad 20\log 0.1 = -20$$

The plots are shown below.

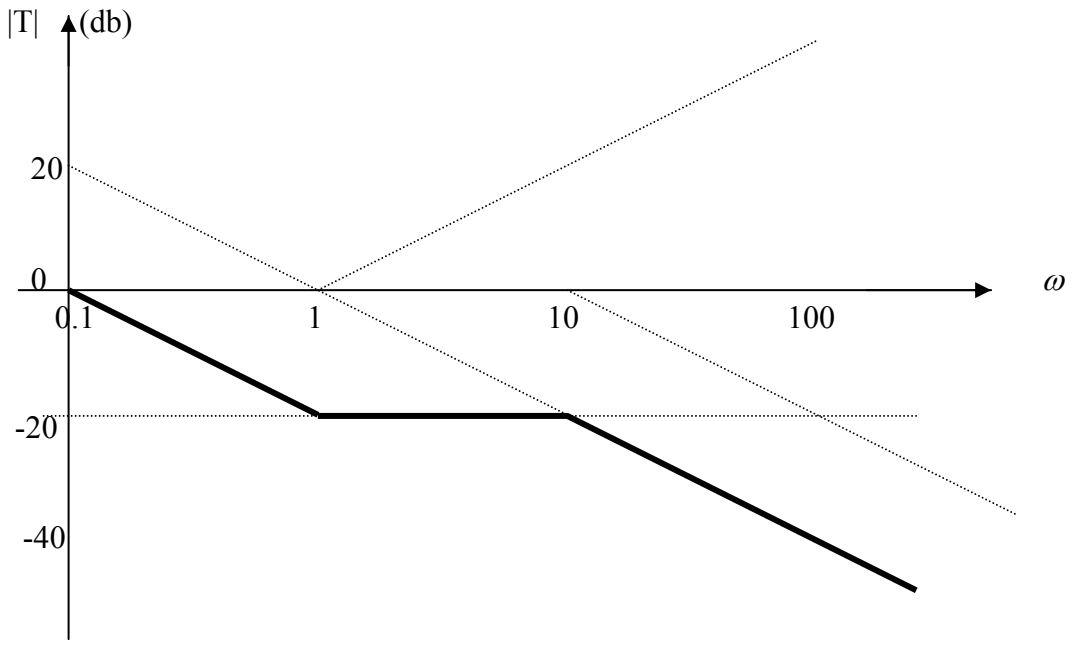

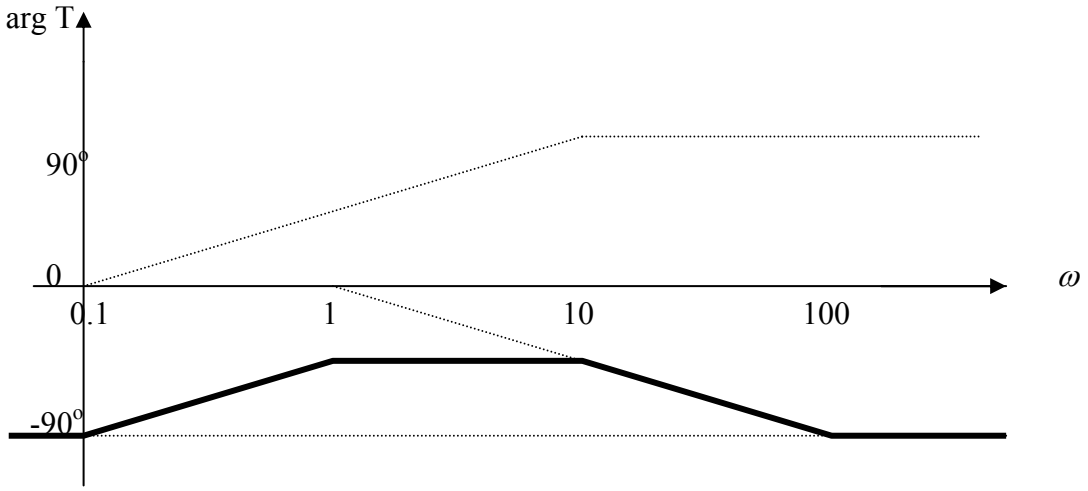

PROPRIETARY MATERIAL. © 2007 The McGraw-Hill Companies, Inc. All rights reserved. No part of this Manual may be displayed, reproduced or distributed in any form or by any means, without the prior written permission of the publisher, or used beyond the limited distribution to teachers and educators permitted by McGraw-Hill for their individual course preparation. If you are a student using this Manual, you are using it without permission.

Chapter 14, Problem 13.

Construct the Bode plots for

$$G(s) = \frac{s+1}{s^2(s+10)}, \qquad s = j\omega$$

Chapter 14, Solution 13.

$$\mathbf{G}(\omega) = \frac{1+j\omega}{(j\omega)^2(10+j\omega)} = \frac{(1/10)(1+j\omega)}{(j\omega)^2(1+j\omega/10)}$$

$$G_{dB} = -20 + 20\log_{10}|1+j\omega| - 40\log_{10}|j\omega| - 20\log_{10}|1+j\omega/10|$$
$$\phi = -180° + \tan^{-1}\omega - \tan^{-1}\omega/10$$

<u>The magnitude and phase plots are shown below</u>.

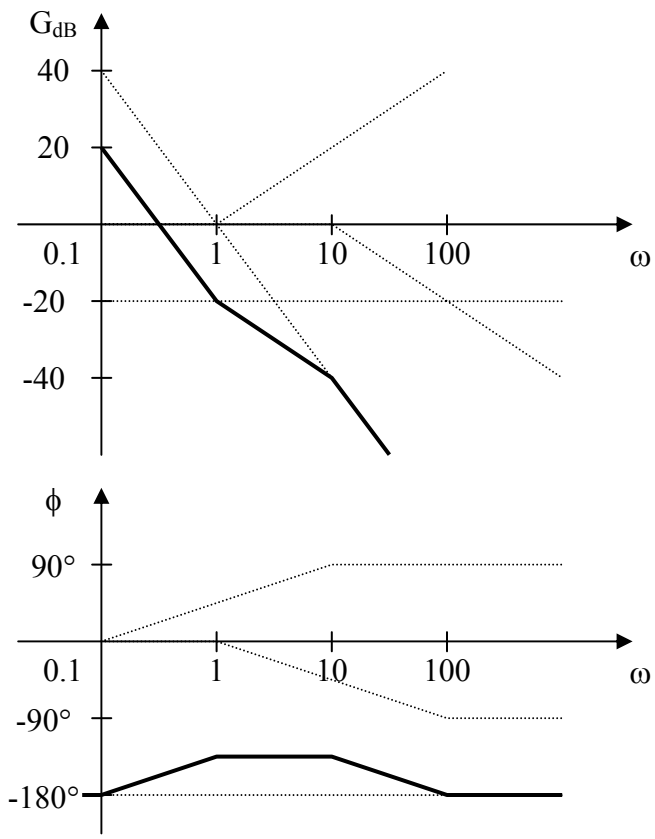

<u>PROPRIETARY MATERIAL</u>. © 2007 The McGraw-Hill Companies, Inc. All rights reserved. <u>No part of this Manual may be displayed, reproduced or distributed in any form or by any means, without the prior written permission of the publisher, or used beyond the limited distribution to teachers and educators permitted by McGraw-Hill for their individual course preparation. If you are a student using this Manual, you are using it without permission.</u>

Chapter 14, Problem 14.

Draw the Bode plots for

$$\mathbf{H}(\omega) = \frac{50(j\omega+1)}{j\omega(-\omega^2+10j\omega+25)}$$

Chapter 14, Solution 14.

$$\mathbf{H}(\omega) = \frac{50}{25}\frac{1+j\omega}{j\omega\left(1+\frac{j\omega 10}{25}+\left(\frac{j\omega}{5}\right)^2\right)}$$

$$H_{dB} = 20\log_{10} 2 + 20\log_{10}\left|1+j\omega\right| - 20\log_{10}\left|j\omega\right|$$

$$-20\log_{10}\left|1+j\omega 2/5+(j\omega/5)^2\right|$$

$$\phi = -90° + \tan^{-1}\omega - \tan^{-1}\left(\frac{\omega 10/25}{1-\omega^2/5}\right)$$

<u>The magnitude and phase plots are shown below</u>.

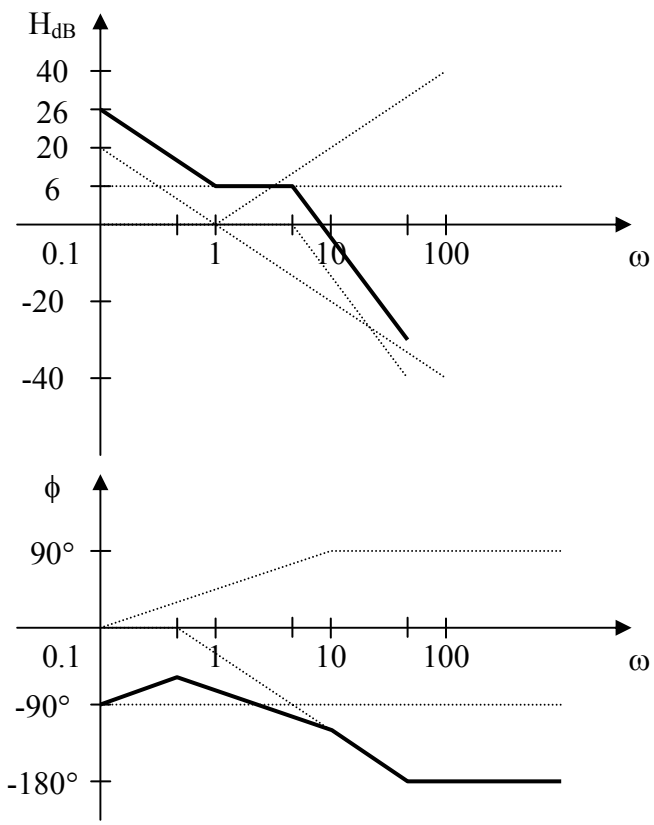

<u>PROPRIETARY MATERIAL</u>. © 2007 The McGraw-Hill Companies, Inc. All rights reserved. <u>No part of this Manual may be displayed, reproduced or distributed in any form or by any means, without the prior written permission of the publisher, or used beyond the limited distribution to teachers and educators permitted by McGraw-Hill for their individual course preparation. If you are a student using this Manual, you are using it without permission.</u>

Chapter 14, Problem 15.

Construct the Bode magnitude and phase plots for

$$H(s) = \frac{40(s+1)}{(s+2)(s+10)}, \qquad s = j\omega$$

Chapter 14, Solution 15.

$$\mathbf{H}(\omega) = \frac{40(1+j\omega)}{(2+j\omega)(10+j\omega)} = \frac{2(1+j\omega)}{(1+j\omega/2)(1+j\omega/10)}$$

$$H_{dB} = 20\log_{10} 2 + 20\log_{10}|1+j\omega| - 20\log_{10}|1+j\omega/2| - 20\log_{10}|1+j\omega/10|$$

$$\phi = \tan^{-1}\omega - \tan^{-1}\omega/2 - \tan^{-1}\omega/10$$

<u>The magnitude and phase plots are shown below</u>.

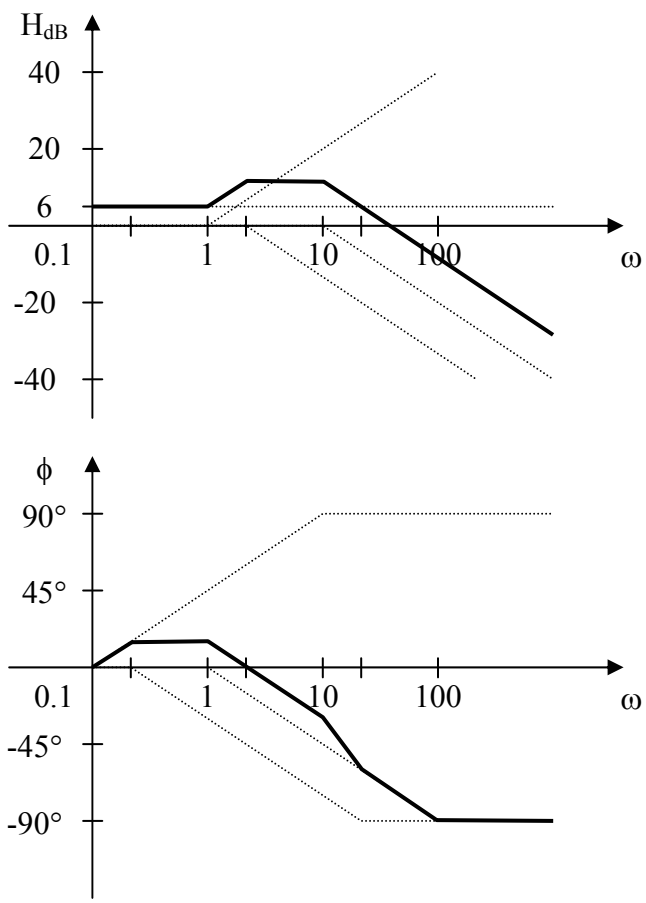

<u>PROPRIETARY MATERIAL</u>. © 2007 The McGraw-Hill Companies, Inc. All rights reserved. <u>No part of this Manual may be displayed, reproduced or distributed in any form or by any means, without the prior written permission of the publisher, or used beyond the limited distribution to teachers and educators permitted by McGraw-Hill for their individual course preparation. If you are a student using this Manual, you are using it without permission.</u>

Chapter 14, Problem 16.

Sketch Bode magnitude and phase plots for

$$H(s) = \frac{10}{s(s^2 + s + 16)}, \qquad s = j\omega$$

Chapter 14, Solution 16.

$$H(\omega) = \frac{10/16}{j\omega\left[1 + j\omega + \left(\frac{j\omega}{4}\right)^2\right]} = \frac{0.625}{j\omega\left[1 + j\omega + \left(\frac{j\omega}{4}\right)^2\right]}$$

$$H_{dB} = 20\log 0.625 - 20\log|j\omega| - 20\log\left|1 + j\omega + \left(\frac{j\omega}{4}\right)^2\right|$$

(20log0,625= –4.082)

The magnitude and phase plots are shown below.

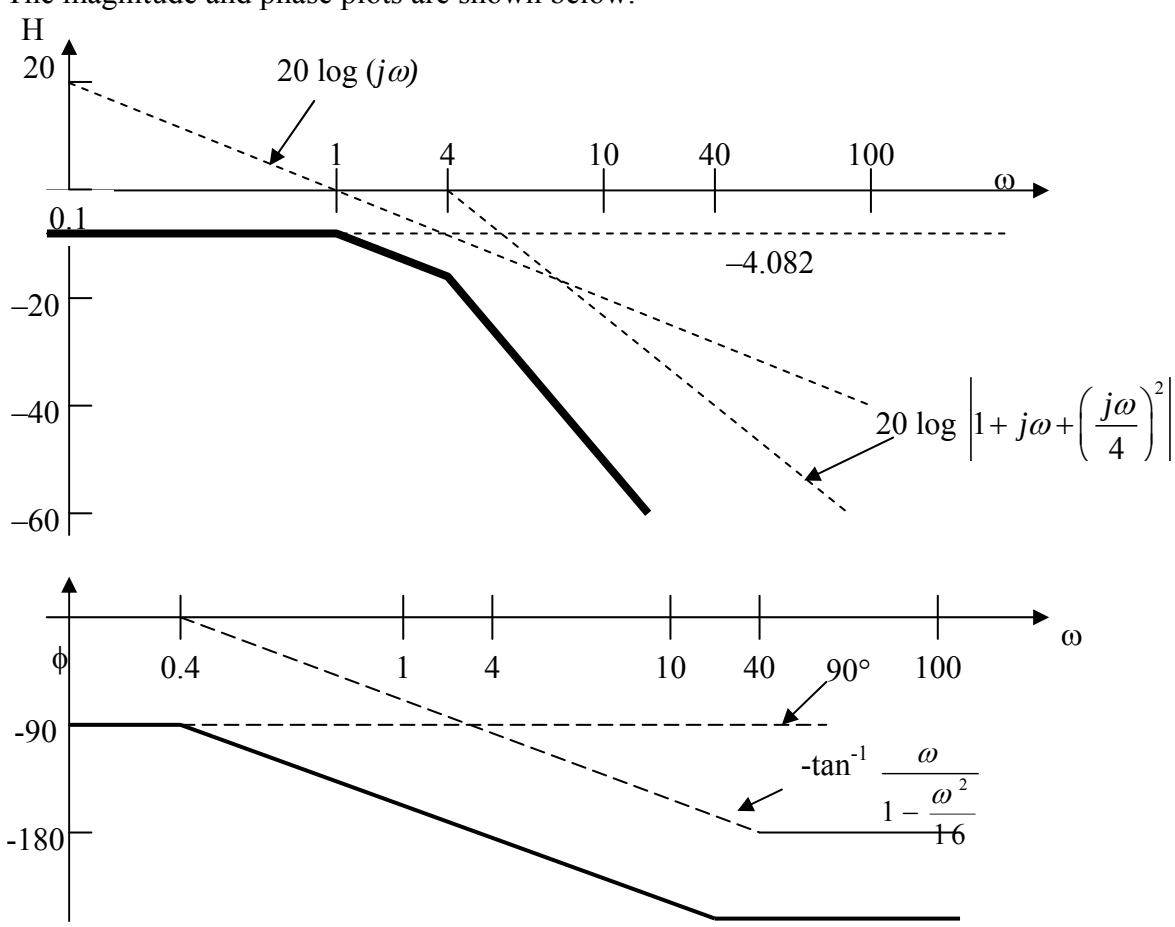

PROPRIETARY MATERIAL. © 2007 The McGraw-Hill Companies, Inc. All rights reserved. No part of this Manual may be displayed, reproduced or distributed in any form or by any means, without the prior written permission of the publisher, or used beyond the limited distribution to teachers and educators permitted by McGraw-Hill for their individual course preparation. If you are a student using this Manual, you are using it without permission.

Chapter 14, Problem 17.

Sketch the Bode plots for

$$G(s) = \frac{s}{(s+2)^2 + (s+1)}, \qquad s = j\omega$$

Chapter 14, Solution 17.

$$\mathbf{G}(\omega) = \frac{(1/4)\, j\omega}{(1 + j\omega)(1 + j\omega/2)^2}$$

$$G_{dB} = -20\log_{10} 4 + 20\log_{10}|j\omega| - 20\log_{10}|1 + j\omega| - 40\log_{10}|1 + j\omega/2|$$

$$\phi = -90° - \tan^{-1}\omega - 2\tan^{-1}\omega/2$$

<u>The magnitude and phase plots are shown below</u>.

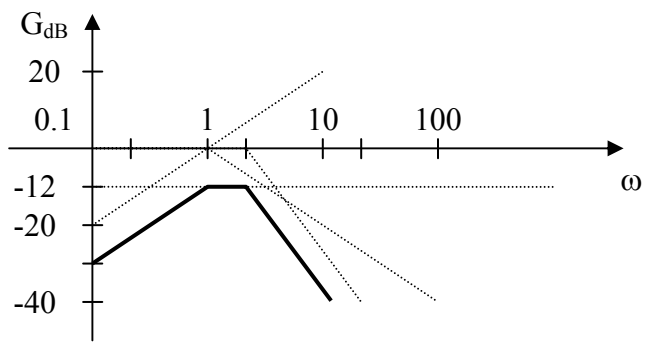

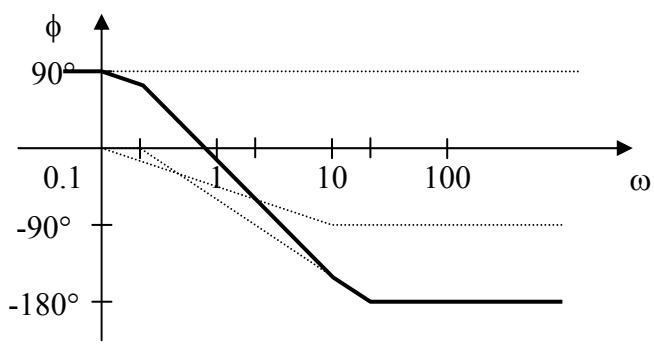

<u>PROPRIETARY MATERIAL</u>. © 2007 The McGraw-Hill Companies, Inc. All rights reserved. <u>No part of this Manual may be displayed, reproduced or distributed in any form or by any means, without the prior written permission of the publisher, or used beyond the limited distribution to teachers and educators permitted by McGraw-Hill for their individual course preparation. If you are a student using this Manual, you are using it without permission.</u>

Chapter 14, Problem 18.

ML

A linear network has this transfer function

$$H(s) = \frac{7s^2 + s + 4}{(s^3 + 8s^2 + 14s + 5)}, \qquad s = j\omega$$

Use *MATLAB* or equivalent to plot the magnitude and phase (in degrees) of the transfer function. Take $0.1 < \omega < 10$ rads/s.

Chapter 14, Solution 18.

The MATLAB code is shown below.

```
>> w=logspace(-1,1,200);
>> s=i*w;
>> h=(7*s.^2+s+4)./(s.^3+8*s.^2+14*s+5);
>> Phase=unwrap(angle(h))*57.23;
>> semilogx(w,Phase)
>> grid on
```

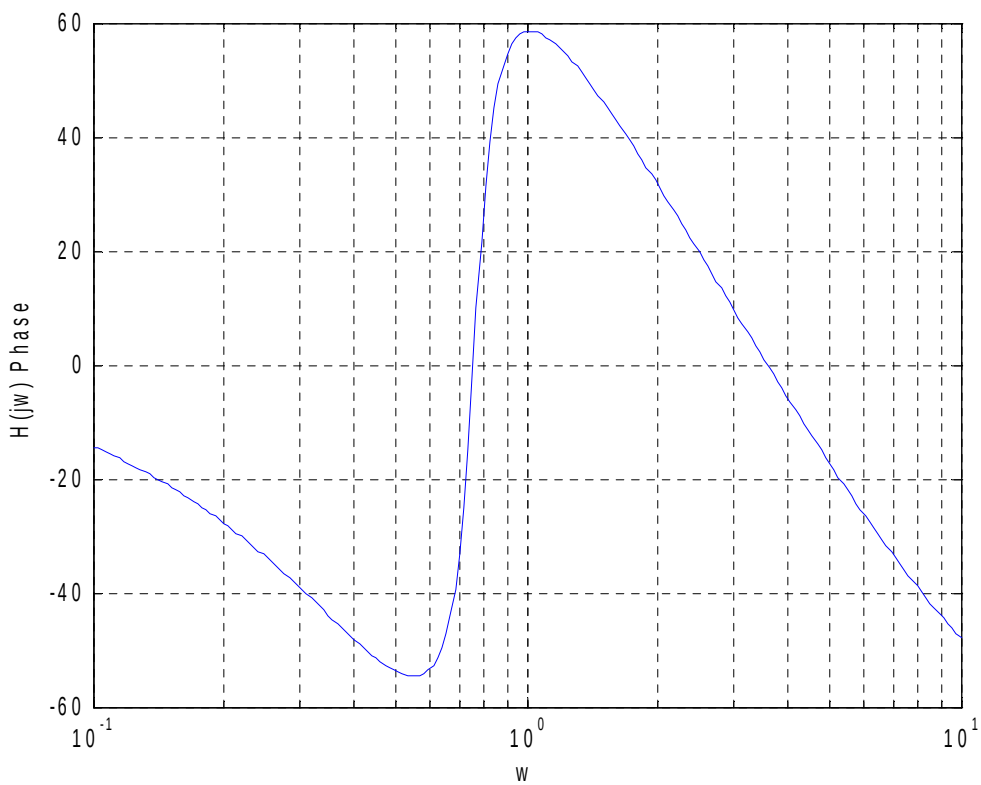

PROPRIETARY MATERIAL. © 2007 The McGraw-Hill Companies, Inc. All rights reserved. No part of this Manual may be displayed, reproduced or distributed in any form or by any means, without the prior written permission of the publisher, or used beyond the limited distribution to teachers and educators permitted by McGraw-Hill for their individual course preparation. If you are a student using this Manual, you are using it without permission.

Now for the magnitude, we need to add the following to the above,

```
>> H=abs(h);
>> HdB=20*log10(H);
>> semilogx(w,HdB);
>> grid on
```

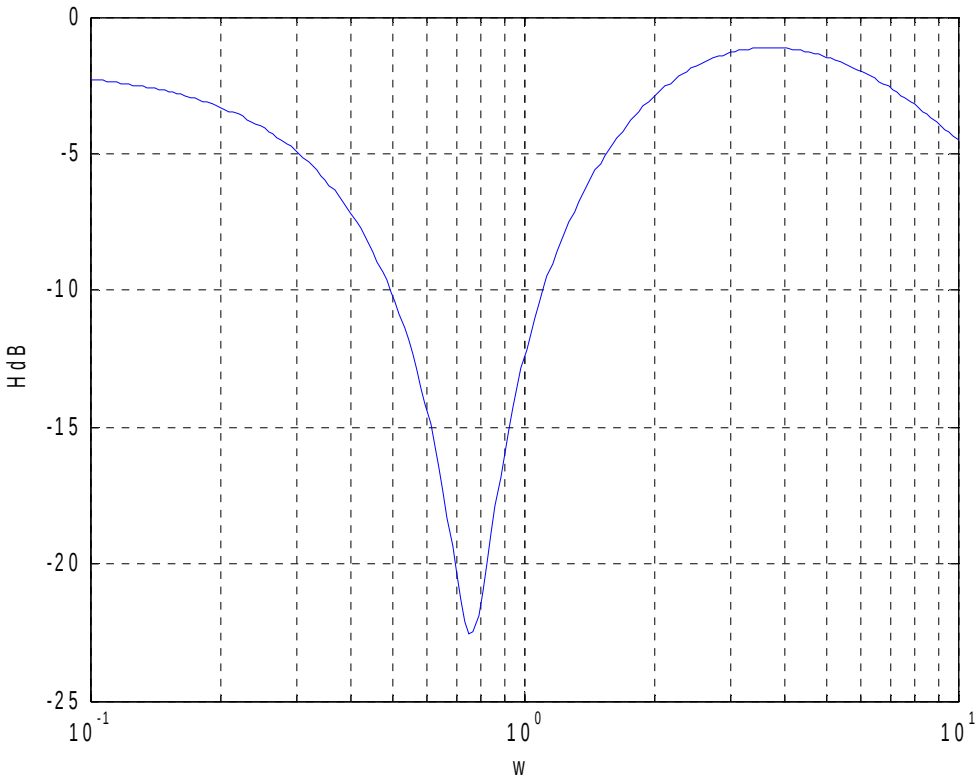

PROPRIETARY MATERIAL. © 2007 The McGraw-Hill Companies, Inc. All rights reserved. No part of this Manual may be displayed, reproduced or distributed in any form or by any means, without the prior written permission of the publisher, or used beyond the limited distribution to teachers and educators permitted by McGraw-Hill for their individual course preparation. If you are a student using this Manual, you are using it without permission.

Chapter 14, Problem 19.

Sketch the asymptotic Bode plots of the magnitude and phase for

$$H(s) = \frac{100s}{(s+10)(s+20)(s+40)}, \qquad s = j\omega$$

Chapter 14, Solution 19.

$$H(\omega) = \frac{100\,j\omega}{(j\omega+10)(j\omega+20)(j\omega+40)} = \frac{j\omega/80}{(1+\frac{j\omega}{10})(1+\frac{j\omega}{20})(1+\frac{j\omega}{40})}$$

$$H_{dB} = 20\log(1/80) + 20\log|j\omega/1| - 20\log|1+\frac{j\omega}{10}| - 20\log|1+\frac{j\omega}{20}| - 20\log|1+\frac{j\omega}{40}|$$

(20log(1/80) = -38.06)

The magnitude and phase plots are shown below.

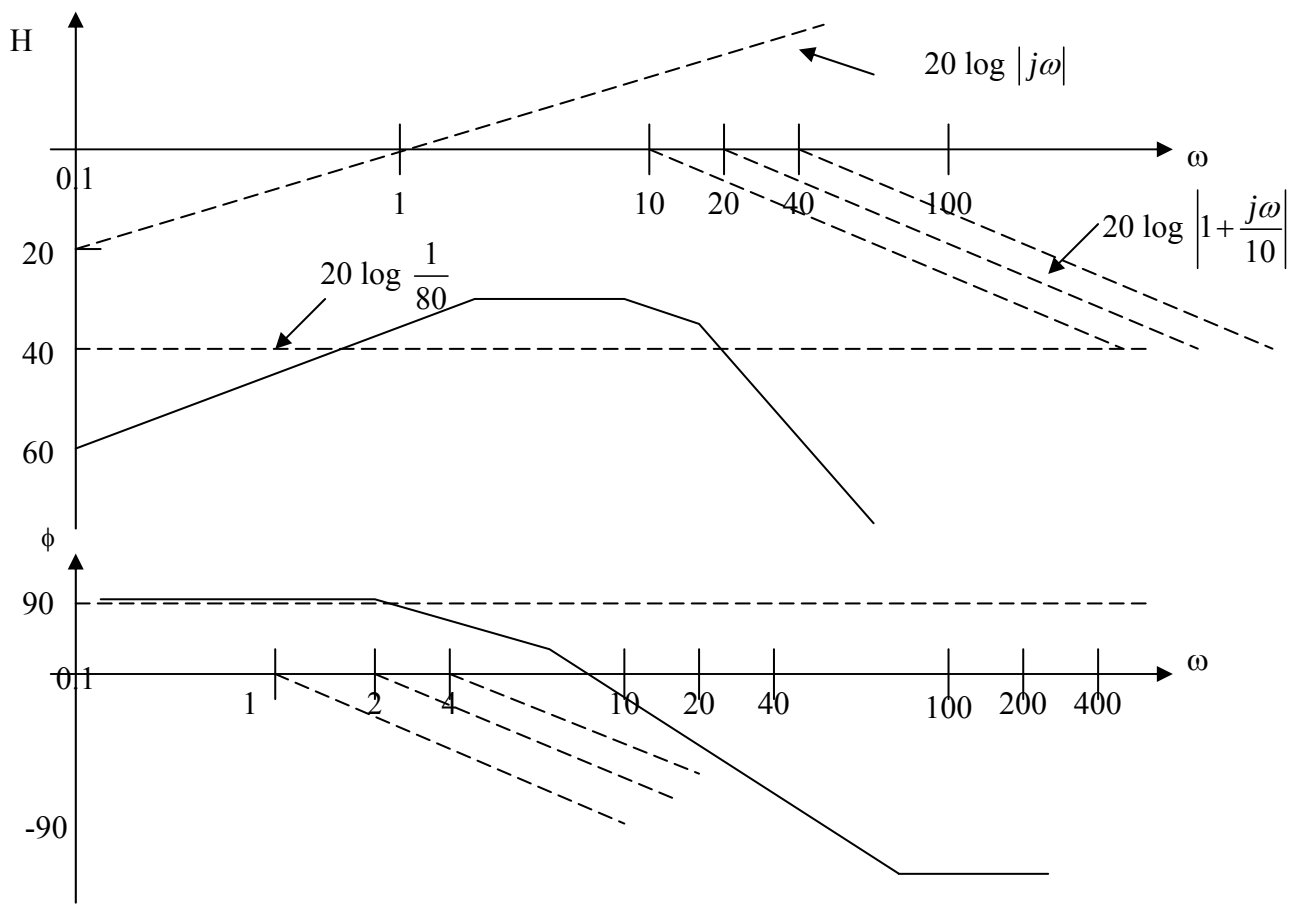

PROPRIETARY MATERIAL. © 2007 The McGraw-Hill Companies, Inc. All rights reserved. No part of this Manual may be displayed, reproduced or distributed in any form or by any means, without the prior written permission of the publisher, or used beyond the limited distribution to teachers and educators permitted by McGraw-Hill for their individual course preparation. If you are a student using this Manual, you are using it without permission.

Chapter 14, Problem 20.

Sketch the magnitude Bode plot for the transfer function

$$H(\omega) = \frac{10j\omega}{(j\omega+1)(j\omega+5)^2(j\omega+40)}$$

Chapter 14, Solution 20.

$$H(\omega) = \frac{10j\omega}{(25)(40)(1+j\omega)(1+j\omega/5)^2(1+j\omega/40)} = \frac{j\omega/100}{(1+j\omega)(1+j\omega/5)^2(1+j\omega/40)}$$

20log(1/100) = -40

The magnitude plot is shown below.

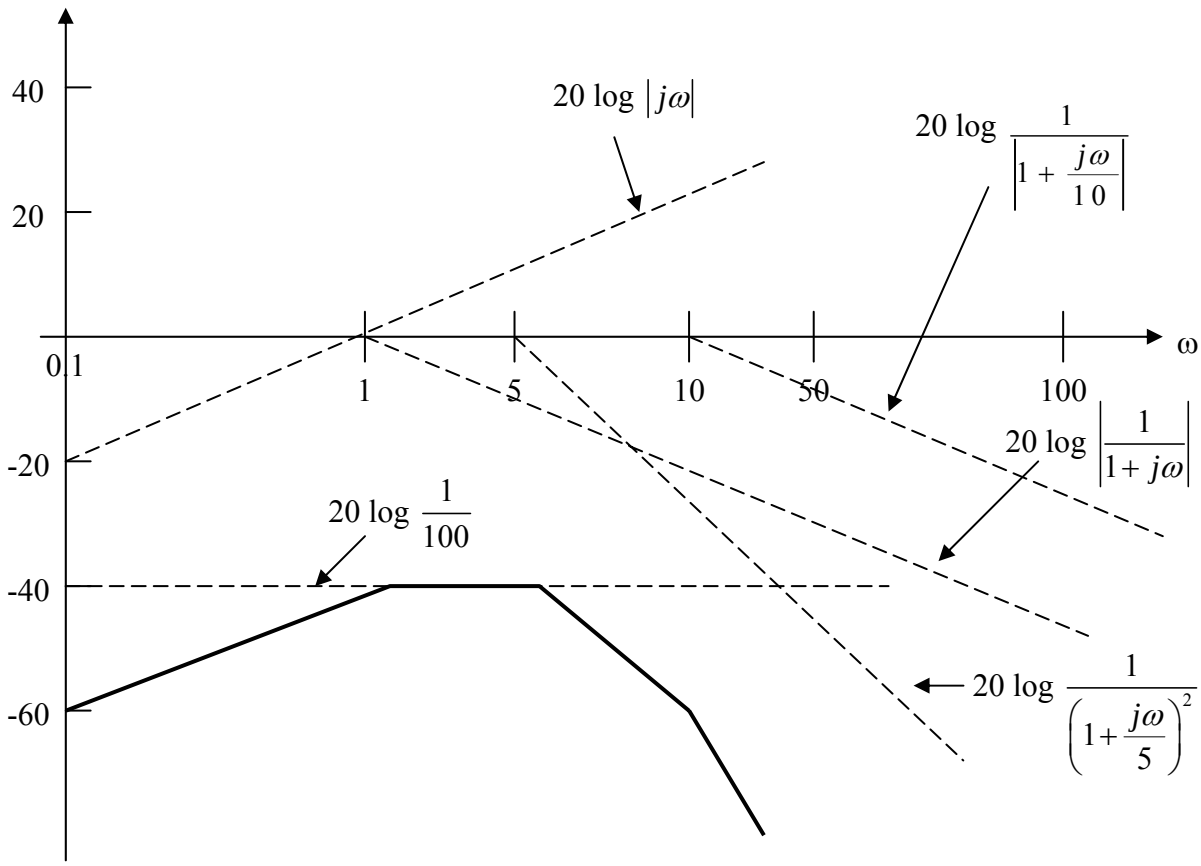

PROPRIETARY MATERIAL. © 2007 The McGraw-Hill Companies, Inc. All rights reserved. No part of this Manual may be displayed, reproduced or distributed in any form or by any means, without the prior written permission of the publisher, or used beyond the limited distribution to teachers and educators permitted by McGraw-Hill for their individual course preparation. If you are a student using this Manual, you are using it without permission.

Chapter 14, Problem 21.

Sketch the magnitude Bode plot for

$$H(s) = \frac{s(s+20)}{(s+1)(s^2+60s)=(400)}, \qquad s=j\omega$$

Chapter 14, Solution 21.

$$H(\omega) = \frac{j\omega(j\omega+20)}{(j\omega+1)(-\omega^2+60j\omega+400)} = \frac{20j\omega(1+j\omega/20)}{400(j\omega+1)(1+60j\omega/400+\left(\frac{j\omega}{20}\right)^2)}$$

$$\mathrm{H}(\omega) = \frac{0.05\mathrm{j}\omega(1+\mathrm{j}\omega/20)}{(1+\mathrm{j}\omega)\left(1+\frac{6\mathrm{j}\omega}{40}+\left(\frac{\mathrm{j}\omega}{20}\right)^2\right)}$$

$$\mathrm{H}_{\mathrm{dB}} = 20\log(0.05) + 20\log|\mathrm{j}\omega| + 20\log\left|1+\frac{\mathrm{j}\omega}{20}\right| - 20\log|1+\mathrm{j}\omega| - 20\log\left|1+\frac{\mathrm{j}6\omega}{40}+\left(\frac{\mathrm{j}\omega}{20}\right)^2\right|$$

The magnitude plot is as sketched below.

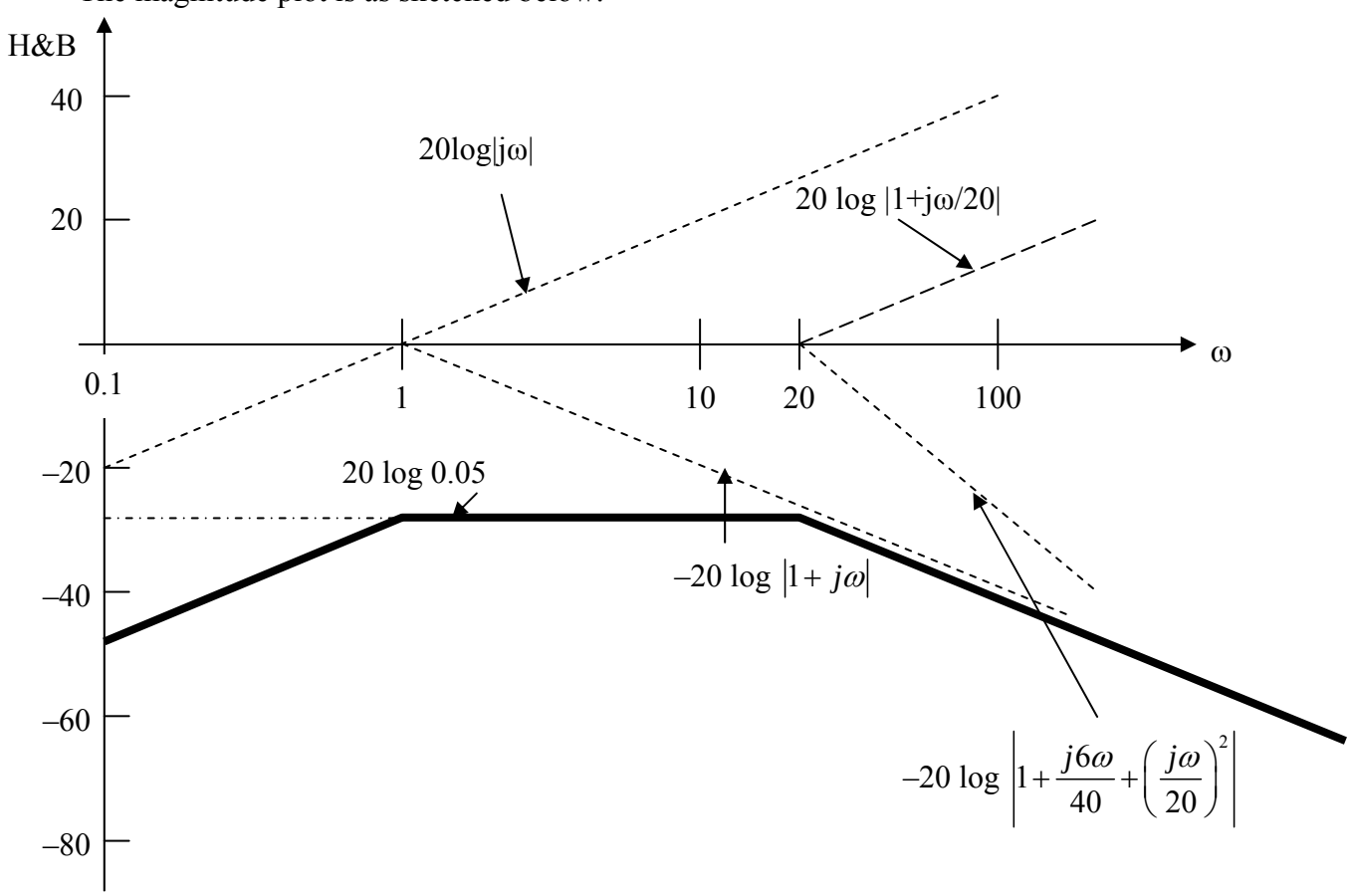

PROPRIETARY MATERIAL. © 2007 The McGraw-Hill Companies, Inc. All rights reserved. No part of this Manual may be displayed, reproduced or distributed in any form or by any means, without the prior written permission of the publisher, or used beyond the limited distribution to teachers and educators permitted by McGraw-Hill for their individual course preparation. If you are a student using this Manual, you are using it without permission.

Chapter 14, Problem 22.

Find the transfer function $\mathbf{H}(\omega)$ with the Bode magnitude plot shown in Fig. 14.74.

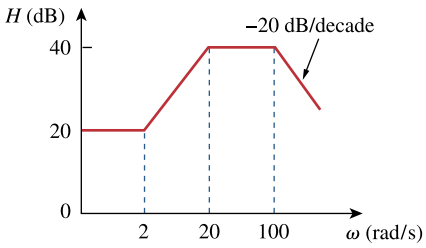

Figure 14.74
For Prob. 14.22.

Chapter 14, Solution 22.

$$20 = 20\log_{10} k \longrightarrow k = 10$$

$$\text{A zero of slope } +20\text{ dB/dec at } \omega = 2 \longrightarrow 1 + j\omega/2$$

$$\text{A pole of slope } -20\text{ dB/dec at } \omega = 20 \longrightarrow \frac{1}{1 + j\omega/20}$$

$$\text{A pole of slope } -20\text{ dB/dec at } \omega = 100 \longrightarrow \frac{1}{1 + j\omega/100}$$

Hence,

$$\mathbf{H}(\omega) = \frac{10(1 + j\omega/2)}{(1 + j\omega/20)(1 + j\omega/100)}$$

$$\mathbf{H}(\omega) = \underline{\frac{\mathbf{10^4\,(2 + j\omega)}}{\mathbf{(20 + j\omega)(100 + j\omega)}}}$$

PROPRIETARY MATERIAL. © 2007 The McGraw-Hill Companies, Inc. All rights reserved. No part of this Manual may be displayed, reproduced or distributed in any form or by any means, without the prior written permission of the publisher, or used beyond the limited distribution to teachers and educators permitted by McGraw-Hill for their individual course preparation. If you are a student using this Manual, you are using it without permission.

Chapter 14, Problem 23.

The Bode magnitude plot of $\mathbf{H}(\omega)$ is shown in Fig. 14.75. Find $\mathbf{H}(\omega)$.

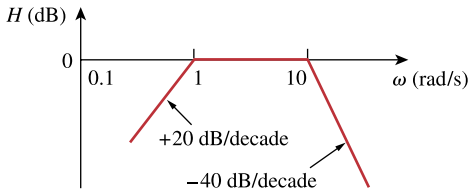

Figure 14.75
For Prob. 14.23.

Chapter 14, Solution 23.

$$\text{A zero of slope } +20\text{ dB/dec at the origin} \longrightarrow j\omega$$

$$\text{A pole of slope } -20\text{ dB/dec at } \omega = 1 \longrightarrow \frac{1}{1 + j\omega/1}$$

$$\text{A pole of slope } -40\text{ dB/dec at } \omega = 10 \longrightarrow \frac{1}{(1 + j\omega/10)^2}$$

Hence,

$$\mathbf{H}(\omega) = \frac{j\omega}{(1 + j\omega)(1 + j\omega/10)^2}$$

$$\mathbf{H}(\omega) = \underline{\frac{\mathbf{100\, j\omega}}{\mathbf{(1 + j\omega)(10 + j\omega)^2}}}$$

PROPRIETARY MATERIAL. © 2007 The McGraw-Hill Companies, Inc. All rights reserved. No part of this Manual may be displayed, reproduced or distributed in any form or by any means, without the prior written permission of the publisher, or used beyond the limited distribution to teachers and educators permitted by McGraw-Hill for their individual course preparation. If you are a student using this Manual, you are using it without permission.

Chapter 14, Problem 24.

The magnitude plot in Fig. 14.76 represents the transfer function of a preamplifier. Find $H(s)$.

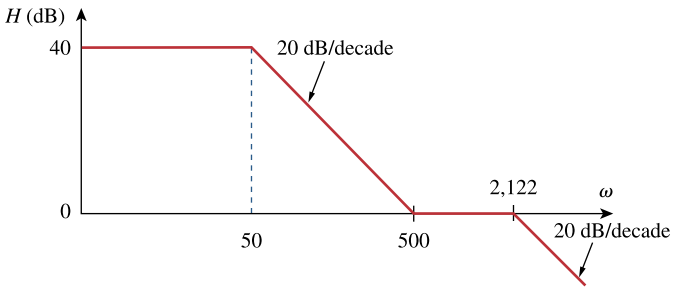

Figure 14.76
For Prob. 14.24.

Chapter 14, Solution 24.

$$40 = 20\log_{10} K \quad \longrightarrow \quad K = 100$$

There is a pole at ω=50 giving 1/(1+jω/50)
There is a zero at ω=500 giving (1 + jω/500).
There is another pole at ω=2122 giving 1/(1 + jω/2122).
Thus,

$$H(\omega) = \frac{40(1 + j\omega/500)}{(1 + j\omega/50)(1 + j\omega/2122)} = \frac{40x\frac{1}{500}(s+500)}{\frac{1}{50}x\frac{1}{2122}(s+50)(s+2122)}$$

or

$$H(s) = \frac{8488(s+500)}{(s+50)(s+2122)}$$

PROPRIETARY MATERIAL. © 2007 The McGraw-Hill Companies, Inc. All rights reserved. No part of this Manual may be displayed, reproduced or distributed in any form or by any means, without the prior written permission of the publisher, or used beyond the limited distribution to teachers and educators permitted by McGraw-Hill for their individual course preparation. If you are a student using this Manual, you are using it without permission.

Chapter 14, Problem 25.

A series *RLC* network has $R = 2\ \mathrm{k}\Omega$, $L = 40$ mH, and $C = 1\ \mu\mathrm{F}$. Calculate the impedance at resonance and at one-fourth, one-half, twice, and four times the resonant frequency.

PROPRIETARY MATERIAL. © 2007 The McGraw-Hill Companies, Inc. All rights reserved. No part of this Manual may be displayed, reproduced or distributed in any form or by any means, without the prior written permission of the publisher, or used beyond the limited distribution to teachers and educators permitted by McGraw-Hill for their individual course preparation. If you are a student using this Manual, you are using it without permission.

Chapter 14, Solution 25.

$$\omega_0 = \frac{1}{\sqrt{LC}} = \frac{1}{\sqrt{(40\times10^{-3})(1\times10^{-6})}} = 5\ \text{krad/s}$$

$$\mathbf{Z}(\omega_0) = R = \underline{\mathbf{2\ k\Omega}}$$

$$\mathbf{Z}(\omega_0/4) = R + j\left(\frac{\omega_0}{4}L - \frac{4}{\omega_0 C}\right)$$

$$\mathbf{Z}(\omega_0/4) = 2000 + j\left(\frac{5\times10^3}{4}\cdot 40\times10^{-3} - \frac{4}{(5\times10^3)(1\times10^{-6})}\right)$$

$$\mathbf{Z}(\omega_0/4) = 2000 + j(50 - 4000/5)$$

$$\mathbf{Z}(\omega_0/4) = \underline{\mathbf{2 - j0.75\ k\Omega}}$$

$$\mathbf{Z}(\omega_0/2) = R + j\left(\frac{\omega_0}{2}L - \frac{2}{\omega_0 C}\right)$$

$$\mathbf{Z}(\omega_0/2) = 2000 + j\left(\frac{(5\times10^3)}{2}(40\times10^{-3}) - \frac{2}{(5\times10^3)(1\times10^{-6})}\right)$$

$$\mathbf{Z}(\omega_0/2) = 200+j(100-2000/5)$$

$$\mathbf{Z}(\omega_0/2) = \underline{\mathbf{2 - j0.3\ k\Omega}}$$

$$\mathbf{Z}(2\omega_0) = R + j\left(2\omega_0 L - \frac{1}{2\omega_0 C}\right)$$

$$\mathbf{Z}(2\omega_0) = 2000 + j\left((2)(5\times10^3)(40\times10^{-3}) - \frac{1}{(2)(5\times10^3)(1\times10^{-6})}\right)$$

$$\mathbf{Z}(2\omega_0) = \underline{\mathbf{2 + j0.3\ k\Omega}}$$

$$\mathbf{Z}(4\omega_0) = R + j\left(4\omega_0 L - \frac{1}{4\omega_0 C}\right)$$

$$\mathbf{Z}(4\omega_0) = 2000 + j\left((4)(5\times10^3)(40\times10^{-3}) - \frac{1}{(4)(5\times10^3)(1\times10^{-6})}\right)$$

$$\mathbf{Z}(4\omega_0) = \underline{\mathbf{2 + j0.75\ k\Omega}}$$

PROPRIETARY MATERIAL. © 2007 The McGraw-Hill Companies, Inc. All rights reserved. No part of this Manual may be displayed, reproduced or distributed in any form or by any means, without the prior written permission of the publisher, or used beyond the limited distribution to teachers and educators permitted by McGraw-Hill for their individual course preparation. If you are a student using this Manual, you are using it without permission.

Chapter 14, Problem 26.

A coil with resistance $3\,\Omega$ and inductance 100 mH is connected in series with a capacitor of 50 pF, a resistor of $6\,\Omega$ and a signal generator that gives 110 V rms at all frequencies. Calculate ω_o, Q, and B at resonance of the resultant series *RLC* circuit.

Chapter 14, Solution 26.

Consider the circuit as shown below. This is a series RLC resonant circuit.

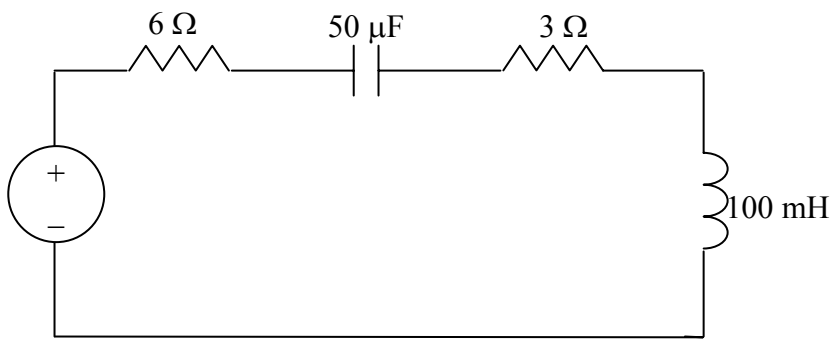

R = 6 + 3 = 9 Ω

$$\omega_o = \frac{1}{\sqrt{LC}} = \frac{1}{\sqrt{100x10^{-3}\,x50x10^{-12}}} = \underline{447.21 \text{ krad/s}}$$

$$Q = \frac{\omega_o L}{R} = \frac{447.21x10^3\,x100x10^3}{9} = \underline{4969}$$

$$B = \frac{\omega_o}{Q} = \frac{447.21x10^3}{4969} = \underline{90 \text{ rad/s}}$$

PROPRIETARY MATERIAL. © 2007 The McGraw-Hill Companies, Inc. All rights reserved. No part of this Manual may be displayed, reproduced or distributed in any form or by any means, without the prior written permission of the publisher, or used beyond the limited distribution to teachers and educators permitted by McGraw-Hill for their individual course preparation. If you are a student using this Manual, you are using it without permission.

Chapter 14, Problem 27.

Design a series *RLC* resonant circuit with ω_o = 40 rad/s and B = 10 rad/s.

Chapter 14, Solution 27.

$$\omega_o = \frac{1}{\sqrt{LC}} = 40 \quad \longrightarrow \quad LC = \frac{1}{40^2}$$

$$B = \frac{R}{L} = 10 \quad \longrightarrow \quad R = 10L$$

If we select R =**1 Ω**, then L = R/10 = **0.1 H** and

$$C = \frac{1}{40^2 L} = \frac{1}{40^2 x 0.1} = \underline{6.25 \text{ mF}}$$

Chapter 14, Problem 28.

Design a series *RLC* circuit with B = 20 rad/s and ω_o = 1,000 rad/s. Find the circuit's Q. Let R = 10 Ω.

Chapter 14, Solution 28.

Let $R = 10\,\Omega$.

$$L = \frac{R}{B} = \frac{10}{20} = 0.5 \text{ H}$$

$$C = \frac{1}{\omega_0^2 L} = \frac{1}{(1000)^2(0.5)} = 2\ \mu\text{F}$$

$$Q = \frac{\omega_0}{B} = \frac{1000}{20} = 50$$

Therefore, if $R = 10\,\Omega$ then

L = **0.5 H**, C = **2 μF**, Q = **50**

PROPRIETARY MATERIAL. © 2007 The McGraw-Hill Companies, Inc. All rights reserved. No part of this Manual may be displayed, reproduced or distributed in any form or by any means, without the prior written permission of the publisher, or used beyond the limited distribution to teachers and educators permitted by McGraw-Hill for their individual course preparation. If you are a student using this Manual, you are using it without permission.

Chapter 14, Problem 29.

Let v_s = 20 cos(at) V in the circuit of Fig. 14.77. Find ω_o, Q, and B, as seen by the capacitor.

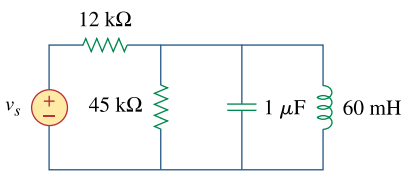

Figure 14.77
For Prob. 14.29.

Chapter 14, Solution 29.

We convert the voltage source to a current source as shown below.

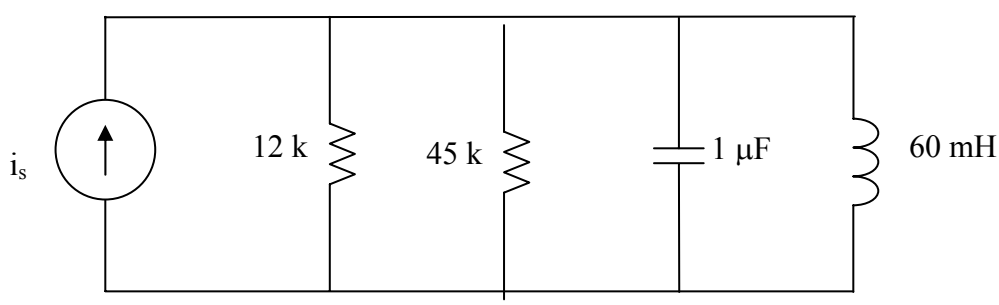

$i_s = \frac{20}{12}\cos\omega t$, R = 12//45= 12x45/57 = 9.4737 kΩ

$$\omega_o = \frac{1}{\sqrt{LC}} = \frac{1}{\sqrt{60x10^{-3}x1x10^{-6}}} = \underline{4.082 \text{ krad/s}}$$

$$B = \frac{1}{RC} = \frac{1}{9.4737x10^3 x10^{-6}} = \underline{105.55 \text{ rad/s}}$$

$$Q = \frac{\omega_o}{B} = \frac{4082}{105.55} = \underline{38.674} = \underline{\mathbf{38.67}}$$

PROPRIETARY MATERIAL. © 2007 The McGraw-Hill Companies, Inc. All rights reserved. No part of this Manual may be displayed, reproduced or distributed in any form or by any means, without the prior written permission of the publisher, or used beyond the limited distribution to teachers and educators permitted by McGraw-Hill for their individual course preparation. If you are a student using this Manual, you are using it without permission.

Chapter 14, Problem 30.

A circuit consisting of a coil with inductance 10 mH and resistance 20 Ω is connected in series with a capacitor and a generator with an rms voltage of 120 V. Find:

(a) the value of the capacitance that will cause the circuit to be in resonance at 15 kHz
(b) the current through the coil at resonance
(c) the *Q* of the circuit

Chapter 14, Solution 30.

Select $R = 10\,\Omega$.

$$L = \frac{R}{\omega_0 Q} = \frac{10}{(10)(20)} = 0.05 \text{ H} = 50 \text{ mH}$$

$$C = \frac{1}{\omega_0^2 L} = \frac{1}{(100)(0.05)} = 0.2 \text{ F}$$

$$B = \frac{1}{RC} = \frac{1}{(10)(0.2)} = 0.5 \text{ rad/s}$$

Therefore, if $R = 10\,\Omega$ then

$L =$ **50 mH**, $C =$ **0.2 F**, $B =$ **0.5 rad/s**

Chapter 14, Problem 31.

Design a parallel resonant *RLC* circuit with ω_o = 10rad/s and Q = 20. Calculate the bandwidth of the circuit. Let $R = 10\,\Omega$.

Chapter 14, Solution 31.

$$X_L = \omega L \longrightarrow L = \frac{X_L}{\omega}$$

$$B = \frac{R}{L} = \frac{\omega R}{X_L} = \frac{2\pi x10x10^6 x5.6x10^3}{40x10^3} = \underline{8.796x10^6 \text{ rad/s}}$$

PROPRIETARY MATERIAL. © 2007 The McGraw-Hill Companies, Inc. All rights reserved. No part of this Manual may be displayed, reproduced or distributed in any form or by any means, without the prior written permission of the publisher, or used beyond the limited distribution to teachers and educators permitted by McGraw-Hill for their individual course preparation. If you are a student using this Manual, you are using it without permission.

Chapter 14, Problem 32.

A parallel *RLC* circuit has the following values:

$R = 60\ \Omega$, $L = 1$ mH, and $C = 50\ \mu$F.

Find the quality factor, the resonant frequency, and the bandwidth of the *RLC* circuit.

Chapter 14, Solution 32.

$$\omega_o = \frac{1}{\sqrt{LC}} = \frac{1}{\sqrt{10^{-3} x 50 x 10^{-6}}} = \underline{4.472\ \text{krad/s}}$$

$$B = \frac{1}{RC} = \frac{1}{60x50x10^{-6}} = \underline{333.33\ \text{rad/s}}$$

$$Q = \frac{\omega_o}{B} = \frac{4472}{333.33} = \underline{13.42}$$

Chapter 14, Problem 33.

A parallel resonant circuit with quality factor 120 has a resonant frequency of 6×10^6 rad/s. Calculate the bandwidth and half-power frequencies.

Chapter 14, Solution 33.

$$Q = \omega_o RC \quad \longrightarrow \quad C = \frac{Q}{2\pi f_o R} = \frac{80}{2\pi x 5.6x10^6 x 40x10^3} = \underline{56.84\ \text{pF}}$$

$$Q = \frac{R}{\omega_o L} \quad \longrightarrow \quad L = \frac{R}{2\pi f_o Q} = \frac{40x10^3}{2\pi x 5.6x10^6 x 80} = \underline{\mathbf{14.21\ \mu H}}$$

Chapter 14, Problem 34.

A parallel *RLC* circuit is resonant at 5.6 MHz, has a *Q* of 80, and has a resistive branch of 40 kΩ. Determine the values of *L* and *C* in the other two branches.

Chapter 14, Solution 34.

(a) $$\omega_o = \frac{1}{\sqrt{LC}} = \frac{1}{\sqrt{8x10^{-3} x 60x10^{-6}}} = \underline{1.443\ \text{krad/s}}$$

(b) $$B = \frac{1}{RC} = \frac{1}{5x10^3 x 60x10^{-6}} = \underline{3.33\ \text{rad/s}}$$

(c) $$Q = \omega_o RC = 1.443x10^3 x 5x10^3 x 60x10^{-6} = \underline{432.9}$$

PROPRIETARY MATERIAL. © 2007 The McGraw-Hill Companies, Inc. All rights reserved. No part of this Manual may be displayed, reproduced or distributed in any form or by any means, without the prior written permission of the publisher, or used beyond the limited distribution to teachers and educators permitted by McGraw-Hill for their individual course preparation. If you are a student using this Manual, you are using it without permission.

Chapter 14, Problem 35.

A parallel *RLC* circuit has $R = 5\text{k}\Omega$, $L = 8$ mH, and $C = \mu\text{F}$. Determine:

(a) the resonant frequency
(b) the bandwidth
(c) the quality factor

Chapter 14, Solution 35.

At resonance,

$$\mathbf{Y} = \frac{1}{R} \longrightarrow R = \frac{1}{Y} = \frac{1}{25\times10^{-3}} = \underline{\mathbf{40\,\Omega}}$$

$$Q = \omega_0 RC \longrightarrow C = \frac{Q}{\omega_0 R} = \frac{80}{(200\times10^3)(40)} = \underline{\mathbf{10\ \mu F}}$$

$$\omega_0 = \frac{1}{\sqrt{LC}} \longrightarrow L = \frac{1}{\omega_0^2 C} = \frac{1}{(4\times10^{10})(10\times10^{-6})} = \underline{\mathbf{2.5\ \mu H}}$$

$$B = \frac{\omega_0}{Q} = \frac{200\times10^3}{80} = \underline{\mathbf{2.5\ krad/s}}$$

$$\omega_1 = \omega_0 - \frac{B}{2} = 200 - 1.25 = \underline{\mathbf{198.75\ krad/s}}$$

$$\omega_2 = \omega_0 + \frac{B}{2} = 200 + 1.25 = \underline{\mathbf{201.25\ krad/s}}$$

PROPRIETARY MATERIAL. © 2007 The McGraw-Hill Companies, Inc. All rights reserved. No part of this Manual may be displayed, reproduced or distributed in any form or by any means, without the prior written permission of the publisher, or used beyond the limited distribution to teachers and educators permitted by McGraw-Hill for their individual course preparation. If you are a student using this Manual, you are using it without permission.

Chapter 14, Problem 36.

It is expected that a parallel *RLC* resonant circuit has a midband admittance of 25 × 110^{-3} S, quality factor of 80, and a resonant frequency of 200 krad/s. Calculate the values of *R*, *L*, and *C*. Find the bandwidth and the half-power frequencies.

Chapter 14, Solution 36.

$$\omega_0 = \frac{1}{\sqrt{LC}} = 5000 \text{ rad/s}$$

$$\mathbf{Y}(\omega_0) = \frac{1}{R} \longrightarrow \mathbf{Z}(\omega_0) = R = \underline{\mathbf{2\ k\Omega}}$$

$$\mathbf{Y}(\omega_0/4) = \frac{1}{R} + j\left(\frac{\omega_0}{4}C - \frac{4}{\omega_0 L}\right) = 0.5 - j18.75 \text{ mS}$$

$$\mathbf{Z}(\omega_0/4) = \frac{1}{0.0005 - j0.01875} = \underline{\mathbf{1.4212 + j53.3\ \Omega}}$$

$$\mathbf{Y}(\omega_0/2) = \frac{1}{R} + j\left(\frac{\omega_0}{2}C - \frac{2}{\omega_0 L}\right) = 0.5 - j7.5 \text{ mS}$$

$$\mathbf{Z}(\omega_0/2) = \frac{1}{0.0005 - j0.0075} = \underline{\mathbf{8.85 + j132.74\ \Omega}}$$

$$\mathbf{Y}(2\omega_0) = \frac{1}{R} + j\left(2\omega_0 L - \frac{1}{2\omega_0 C}\right) = 0.5 + j7.5 \text{ mS}$$

$$\mathbf{Z}(2\omega_0) = \underline{\mathbf{8.85 - j132.74\ \Omega}}$$

$$\mathbf{Y}(4\omega_0) = \frac{1}{R} + j\left(4\omega_0 L - \frac{1}{4\omega_0 C}\right) = 0.5 + j18.75 \text{ mS}$$

$$\mathbf{Z}(4\omega_0) = \underline{\mathbf{1.4212 - j53.3\ \Omega}}$$

PROPRIETARY MATERIAL. © 2007 The McGraw-Hill Companies, Inc. All rights reserved. No part of this Manual may be displayed, reproduced or distributed in any form or by any means, without the prior written permission of the publisher, or used beyond the limited distribution to teachers and educators permitted by McGraw-Hill for their individual course preparation. If you are a student using this Manual, you are using it without permission.

Chapter 14, Problem 37.

Rework Prob. 14.25 if the elements are connected in parallel.

Chapter 14, Solution 37.

$$Z = j\omega L // (R + \frac{1}{j\omega C}) = \frac{j\omega L(R + \frac{1}{j\omega C})}{R + \frac{1}{j\omega C} + j\omega L} = \frac{\left(\frac{L}{C} + j\omega LR\right)\left(R - j(\omega L - \frac{1}{\omega C})\right)}{R^2 + (\omega L - \frac{1}{\omega C})^2}$$

$$\mathrm{Im}(Z) = \frac{\omega LR^2 - \frac{L}{C}\left(\omega L - \frac{1}{\omega C}\right)}{R^2 + (\omega L - \frac{1}{\omega C})^2} = 0 \qquad \longrightarrow \qquad \omega^2(LC - R^2C^2) = 1$$

Thus,

$$\underline{\omega = \frac{1}{\sqrt{LC - R^2C^2}}}$$

PROPRIETARY MATERIAL. © 2007 The McGraw-Hill Companies, Inc. All rights reserved. No part of this Manual may be displayed, reproduced or distributed in any form or by any means, without the prior written permission of the publisher, or used beyond the limited distribution to teachers and educators permitted by McGraw-Hill for their individual course preparation. If you are a student using this Manual, you are using it without permission.

Chapter 14, Problem 38.

Find the resonant frequency of the circuit in Fig. 14.78.

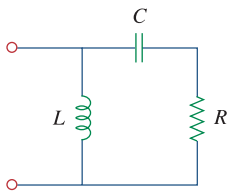

Figure 14.78
For Prob. 14.38.

Chapter 14, Solution 38.

$$Y = \frac{1}{R + j\omega L} + j\omega C = j\omega C + \frac{R - j\omega L}{R^2 + \omega^2 L^2}$$

At resonance, $\text{Im}(\mathbf{Y}) = 0$, i.e.

$$\omega_0 C - \frac{\omega_0 L}{R^2 + \omega_0^2 L^2} = 0$$

$$R^2 + \omega_0^2 L^2 = \frac{L}{C}$$

$$\omega_0 = \sqrt{\frac{1}{LC} - \frac{R^2}{L^2}} = \sqrt{\frac{1}{(40\times10^{-3})(1\times10^{-6})} - \left(\frac{50}{40\times10^{-3}}\right)^2}$$

$$\omega_0 = \underline{\mathbf{4841\ rad/s}}$$

PROPRIETARY MATERIAL. © 2007 The McGraw-Hill Companies, Inc. All rights reserved. No part of this Manual may be displayed, reproduced or distributed in any form or by any means, without the prior written permission of the publisher, or used beyond the limited distribution to teachers and educators permitted by McGraw-Hill for their individual course preparation. If you are a student using this Manual, you are using it without permission.

Chapter 14, Problem 39.

For the "tank" circuit in Fig. 14.79, find the resonant frequency.

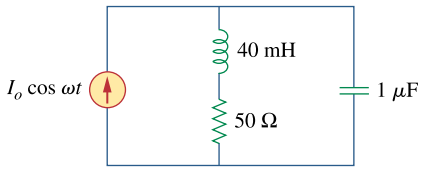

Figure 14.79
For Probs. 14.39 and 14.91.

Chapter 14, Solution 39.

(a) $B = \omega_2 - \omega_1 = 2\pi(f_2 - f_1) = 2\pi(90-86)x10^3 = 8\pi krad/s$

$$\omega_o = \frac{1}{2}(\omega_1 + \omega_2) = 2\pi(88)x10^3 = 176\pi X10^3$$

$$B = \frac{1}{RC} \longrightarrow C = \frac{1}{BR} = \frac{1}{8\pi x10^3 x2x10^3} = \underline{19.89nF}$$

(b) $\omega_o = \frac{1}{\sqrt{LC}} \longrightarrow L = \frac{1}{\omega^2{}_o C} = \frac{1}{(176\pi X10^3)^2 x19.89x10^{-9}} = \underline{\mathbf{164.45\ \mu H}}$

(c) $\omega_o = 176\pi = \underline{552.9krad/s}$

(d) $B = 8\pi = \underline{25.13krad/s}$

(e) $Q = \frac{\omega_o}{B} = \frac{176\pi}{8\pi} = \underline{22}$

PROPRIETARY MATERIAL. © 2007 The McGraw-Hill Companies, Inc. All rights reserved. No part of this Manual may be displayed, reproduced or distributed in any form or by any means, without the prior written permission of the publisher, or used beyond the limited distribution to teachers and educators permitted by McGraw-Hill for their individual course preparation. If you are a student using this Manual, you are using it without permission.

Chapter 14, Problem 40.

A parallel resonance circuit has a resistance of 2 kΩ and half-power frequencies of 86 kHz and 90 kHz. Determine:

(a) the capacitance
(b) the inductance
(c) the resonant frequency
(d) the bandwidth
(e) the quality factor

Chapter 14, Solution 40.

(a) L = 5 + 10 = 15 mH

$$\omega_0 = \frac{1}{\sqrt{LC}} = \frac{1}{\sqrt{15x10^{-3}x20x10^{-6}}} = \underline{\mathbf{1.8257\ k\ rad/sec}}$$

$$Q = \omega_0 RC = 1.8257x10^3 x25x10^3 x20x10^{-6} = \underline{\mathbf{912.8}}$$

$$B = \frac{1}{RC} = \frac{1}{25x10^3 20x10^{-6}} = \underline{\mathbf{2\ rad/s}}$$

(b) To increase B by 100% means that B' = 4.

$$C' = \frac{1}{RB'} = \frac{1}{25x10^3 x4} = \underline{\mathbf{10\ \mu F}}$$

Since $C' = \frac{C_1C_2}{C_1 + C_2} = 10\mu F$ and C_1 = 20 μF, we then obtain C_2 = 20 μF.

Therefore, to increase the bandwidth, we merely **add another 20 μF in series with the first one**.

PROPRIETARY MATERIAL. © 2007 The McGraw-Hill Companies, Inc. All rights reserved. No part of this Manual may be displayed, reproduced or distributed in any form or by any means, without the prior written permission of the publisher, or used beyond the limited distribution to teachers and educators permitted by McGraw-Hill for their individual course preparation. If you are a student using this Manual, you are using it without permission.

Chapter 14, Problem 41.

For the circuit shown in Fig. 14.80, next page:

(a) Calculate the resonant frequency ω_o, the quality factor Q, and the bandwidth B.

(b) What value of capacitance must be connected in series with the 20-μF capacitor in order to double the bandwidth?

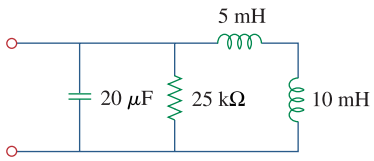

Figure 14.80
For Prob. 14.41.

Chapter 14, Solution 41.

(a) This is a series RLC circuit.

$R = 2 + 6 = 8\,\Omega, \qquad L = 1\text{ H}, \qquad C = 0.4\text{ F}$

$$\omega_0 = \frac{1}{\sqrt{LC}} = \frac{1}{\sqrt{0.4}} = \underline{\mathbf{1.5811\ rad/s}}$$

$$Q = \frac{\omega_0 L}{R} = \frac{1.5811}{8} = \underline{\mathbf{0.1976}}$$

$$B = \frac{R}{L} = \underline{\mathbf{8\ rad/s}}$$

(b) This is a parallel RLC circuit.

$3\ \mu\text{F and } 6\ \mu\text{F} \longrightarrow \dfrac{(3)(6)}{3+6} = 2\ \mu\text{F}$

$C = 2\ \mu\text{F}, \qquad R = 2\text{ k}\Omega, \qquad L = 20\text{ mH}$

$$\omega_0 = \frac{1}{\sqrt{LC}} = \frac{1}{\sqrt{(2\times10^{-6})(20\times10^{-3})}} = \underline{\mathbf{5\ krad/s}}$$

$$Q = \frac{R}{\omega_0 L} = \frac{2\times10^3}{(5\times10^3)(20\times10^{-3})} = \underline{\mathbf{20}}$$

$$B = \frac{1}{RC} = \frac{1}{(2\times10^3)(2\times10^{-6})} = \underline{\mathbf{250\ rad/s}}$$

PROPRIETARY MATERIAL. © 2007 The McGraw-Hill Companies, Inc. All rights reserved. No part of this Manual may be displayed, reproduced or distributed in any form or by any means, without the prior written permission of the publisher, or used beyond the limited distribution to teachers and educators permitted by McGraw-Hill for their individual course preparation. If you are a student using this Manual, you are using it without permission.

Chapter 14, Problem 42.

For the circuits in Fig. 14.81, find the resonant frequency ω_o, the quality factor Q, and the bandwidth B.

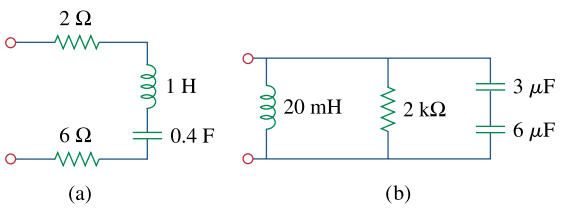

Figure 14.81
For Prob. 14.42.

PROPRIETARY MATERIAL. © 2007 The McGraw-Hill Companies, Inc. All rights reserved. No part of this Manual may be displayed, reproduced or distributed in any form or by any means, without the prior written permission of the publisher, or used beyond the limited distribution to teachers and educators permitted by McGraw-Hill for their individual course preparation. If you are a student using this Manual, you are using it without permission.

Chapter 14, Solution 42.

(a) $\mathbf{Z}_{in} = (1/j\omega C) \,||\, (R + j\omega L)$

$$\mathbf{Z}_{in} = \frac{\dfrac{R + j\omega L}{j\omega C}}{R + j\omega L + \dfrac{1}{j\omega C}} = \frac{R + j\omega L}{1 - \omega^2 LC + j\omega RC}$$

$$\mathbf{Z}_{in} = \frac{(R + j\omega L)(1 - \omega^2 LC - j\omega RC)}{(1 - \omega^2 LC)^2 + \omega^2 R^2 C^2}$$

At resonance, $\mathrm{Im}(\mathbf{Z}_{in}) = 0$, i.e.

$$0 = \omega_0 L(1 - \omega_0^2 LC) - \omega_0 R^2 C$$

$$\omega_0^2 L^2 C = L - R^2 C$$

$$\omega_0 = \sqrt{\frac{L - R^2 C}{L^2 C}} = \underline{\sqrt{\frac{1}{LC} - \frac{R^2}{L^2}}}$$

(b) $\mathbf{Z}_{in} = R \,||\, (j\omega L + 1/j\omega C)$

$$\mathbf{Z}_{in} = \frac{R\,(j\omega L + 1/j\omega C)}{R + j\omega L + 1/j\omega C} = \frac{R\,(1 - \omega^2 LC)}{(1 - \omega^2 LC) + j\omega RC}$$

$$\mathbf{Z}_{in} = \frac{R\,(1 - \omega^2 LC)[(1 - \omega^2 LC) - j\omega RC]}{(1 - \omega^2 LC)^2 + \omega^2 R^2 C^2}$$

At resonance, $\mathrm{Im}(\mathbf{Z}_{in}) = 0$, i.e.

$$0 = R\,(1 - \omega^2 LC)\,\omega RC$$

$$1 - \omega^2 LC = 0$$

$$\omega_0 = \underline{\frac{\mathbf{1}}{\sqrt{\mathbf{LC}}}}$$

PROPRIETARY MATERIAL. © 2007 The McGraw-Hill Companies, Inc. All rights reserved. No part of this Manual may be displayed, reproduced or distributed in any form or by any means, without the prior written permission of the publisher, or used beyond the limited distribution to teachers and educators permitted by McGraw-Hill for their individual course preparation. If you are a student using this Manual, you are using it without permission.

Chapter 14, Problem 43.

Calculate the resonant frequency of each of the circuits in Fig. 14.82.

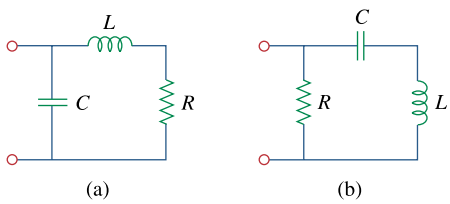

Figure 14.82
For Prob. 14.43.

Chapter 14, Solution 43.

Consider the circuit below.

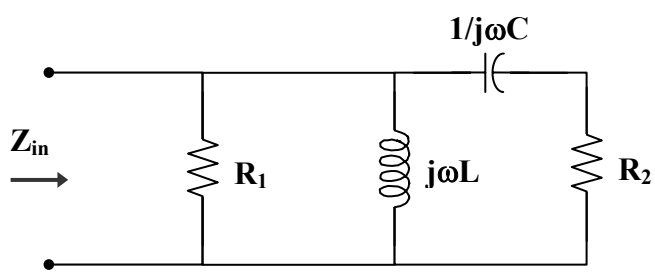

(a) $\mathbf{Z}_{in} = (R_1 \parallel j\omega L) \parallel (R_2 + 1/j\omega C)$

$$\mathbf{Z}_{in} = \left(\frac{R_1 j\omega L}{R_1 + j\omega L}\right) \parallel \left(R_2 + \frac{1}{j\omega C}\right)$$

$$\mathbf{Z}_{in} = \frac{\dfrac{j\omega R_1 L}{R_1 + j\omega L} \cdot \left(R_2 + \dfrac{1}{j\omega C}\right)}{R_2 + \dfrac{1}{j\omega C} + \dfrac{jR_1\omega L}{R_1 + j\omega L}}$$

$$\mathbf{Z}_{in} = \frac{j\omega R_1 L(1 + j\omega R_2 C)}{(R_1 + j\omega L)(1 + j\omega R_2 C) - \omega^2 LCR_1}$$

$$\mathbf{Z}_{in} = \frac{-\omega^2 R_1 R_2 LC + j\omega R_1 L}{R_1 - \omega^2 LCR_1 - \omega^2 LCR_2 + j\omega(L + R_1 R_2 C)}$$

$$\mathbf{Z}_{in} = \frac{(-\omega^2 R_1 R_2 LC + j\omega R_1 L)[R_1 - \omega^2 LCR_1 - \omega^2 LCR_2 - j\omega(L + R_1 R_2 C)]}{(R_1 - \omega^2 LCR_1 - \omega^2 LCR_2)^2 + \omega^2 (L + R_1 R_2 C)^2}$$

PROPRIETARY MATERIAL. © 2007 The McGraw-Hill Companies, Inc. All rights reserved. No part of this Manual may be displayed, reproduced or distributed in any form or by any means, without the prior written permission of the publisher, or used beyond the limited distribution to teachers and educators permitted by McGraw-Hill for their individual course preparation. If you are a student using this Manual, you are using it without permission.

At resonance, $\text{Im}(\mathbf{Z}_{in}) = 0$, i.e.

$$0 = \omega^3 R_1 R_2 LC(L + R_1 R_2 C) + \omega R_1 L(R_1 - \omega^2 LCR_1 - \omega^2 LCR_2)$$
$$0 = \omega^3 R_1^2 R_2^2 LC^2 + R_1^2 \omega L - \omega^3 R_1^2 L^2 C$$
$$0 = \omega^2 R_2^2 C^2 + 1 - \omega^2 LC$$
$$\omega^2 (LC - R_2^2 C^2) = 1$$

$$\omega_0 = \frac{1}{\sqrt{LC - R_2^2 C^2}}$$
$$\omega_0 = \frac{1}{\sqrt{(0.02)(9\times10^{-6}) - (0.1)^2(9\times10^{-6})^2}}$$
$$\omega_0 = \underline{\mathbf{2.357\ krad/s}}$$

(b) At $\omega = \omega_0 = 2.357\ \text{krad/s}$,

$$j\omega L = j(2.357\times10^3)(20\times10^{-3}) = j47.14$$

$$R_1 \parallel j\omega L = \frac{j47.14}{1 + j47.14} = 0.9996 + j0.0212$$

$$R_2 + \frac{1}{j\omega C} = 0.1 + \frac{1}{j(2.357\times10^3)(9\times10^{-6})} = 0.1 - j47.14$$

$$\mathbf{Z}_{in}(\omega_0) = (R_1 \parallel j\omega L) \parallel (R_2 + 1/j\omega C)$$

$$\mathbf{Z}_{in}(\omega_0) = \frac{(0.9996 + j0.0212)(0.1 - j47.14)}{(0.9996 + j0.0212) + (0.1 - j47.14)}$$
$$\mathbf{Z}_{in}(\omega_0) = \underline{\mathbf{1\,\Omega}}$$

PROPRIETARY MATERIAL. © 2007 The McGraw-Hill Companies, Inc. All rights reserved. No part of this Manual may be displayed, reproduced or distributed in any form or by any means, without the prior written permission of the publisher, or used beyond the limited distribution to teachers and educators permitted by McGraw-Hill for their individual course preparation. If you are a student using this Manual, you are using it without permission.

Chapter 14, Problem 44.

* For the circuit in Fig. 14.83, find:

(a) the resonant frequency ω_o

(b) $\mathbf{Z}_{\text{in}}(\omega_o)$

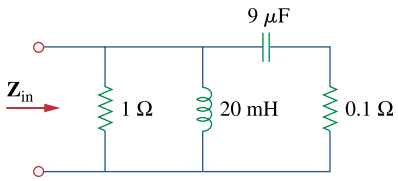

Figure 14.83
For Prob. 14.44.

* An asterisk indicates a challenging problem.

Chapter 14, Solution 44.

We find the input impedance of the circuit shown below.

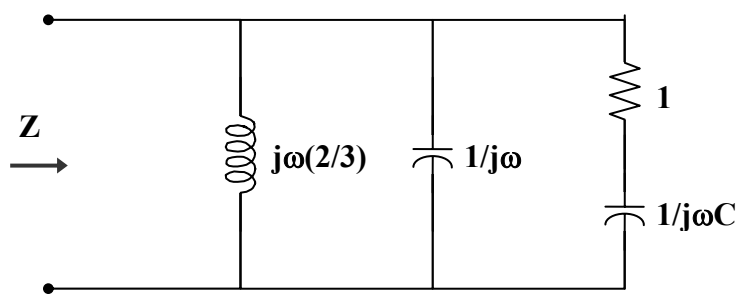

$$\frac{1}{\mathbf{Z}} = \frac{3}{j\omega 2} + j\omega + \frac{1}{1 + 1/j\omega C}, \qquad \omega = 1$$

$$\frac{1}{\mathbf{Z}} = -j1.5 + j + \frac{jC}{1 + jC} = -j0.5 + \frac{C^2 + jC}{1 + C^2}$$

$v(t)$ and $i(t)$ are in phase when **Z** is purely real, i.e.

$$0 = -0.5 + \frac{C}{1 + C^2} \longrightarrow (C-1)^2 = 1 \qquad \text{or} \qquad C = \underline{\mathbf{1\ F}}$$

$$\frac{1}{\mathbf{Z}} = \frac{C^2}{1 + C^2} = \frac{1}{2} \longrightarrow \mathbf{Z} = 2\,\Omega$$

$$\mathbf{V} = \mathbf{Z}\,\mathbf{I} = (2)(10) = 20$$

$$v(t) = 20\sin(t)\ \text{V}, \qquad \text{i.e.} \qquad V_o = \underline{\mathbf{20\ V}}$$

PROPRIETARY MATERIAL. © 2007 The McGraw-Hill Companies, Inc. All rights reserved. No part of this Manual may be displayed, reproduced or distributed in any form or by any means, without the prior written permission of the publisher, or used beyond the limited distribution to teachers and educators permitted by McGraw-Hill for their individual course preparation. If you are a student using this Manual, you are using it without permission.

Chapter 14, Problem 45.

For the circuit shown in Fig. 14.84, find ω_o, B, and Q, as seen by the voltage across the inductor.

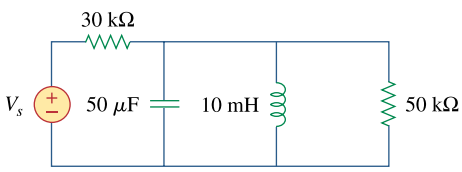

Figure 14.84
For Prob. 14.45.

Chapter 14, Solution 45.

Convert the voltage source to a current source as shown below.

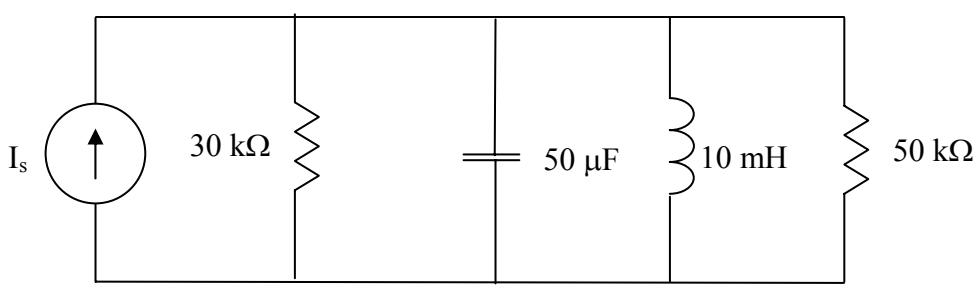

R = 30//50 = 30x50/80 = 18.75 kΩ

This is a parallel resonant circuit.

$$\omega_o = \frac{1}{\sqrt{LC}} = \frac{1}{\sqrt{10x10^{-3}x50x10^{-6}}} = \underline{447.21 \text{ rad/s}}$$

$$B = \frac{1}{RC} = \frac{1}{18.75x10^{3}x50x10^{-6}} = \underline{1.067 \text{ rad/s}}$$

$$Q = \frac{\omega_o}{B} = \frac{447.21}{1.067} = \underline{419.13}$$

PROPRIETARY MATERIAL. © 2007 The McGraw-Hill Companies, Inc. All rights reserved. No part of this Manual may be displayed, reproduced or distributed in any form or by any means, without the prior written permission of the publisher, or used beyond the limited distribution to teachers and educators permitted by McGraw-Hill for their individual course preparation. If you are a student using this Manual, you are using it without permission.

Chapter 14, Problem 46.

For the network illustrated in Fig. 14.85, find

(a) the transfer function $\mathbf{H}(\omega) = \mathbf{V}_o(\omega)/\mathbf{I}(\omega)$,

(b) the magnitude of **H** at $\omega_o = 1$ rad/s.

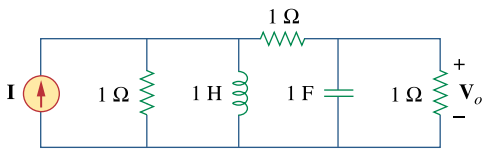

Figure 14.85
For Probs. 14.46, 14.78, and 14.92.

Chapter 14, Solution 46.

(a) This is an RLC series circuit.

$$\omega_o = \frac{1}{\sqrt{LC}} \longrightarrow C = \frac{1}{\omega^2{}_o L} = \frac{1}{(2\pi x15x10^3)^2 x10x10^{-3}} = \underline{11.26nF}$$

(b) $Z = R,\ I = V/Z = 120/20 = \underline{\mathbf{6\ A}}$

(c) $$Q = \frac{\omega_o L}{R} = \frac{2\pi x15x10^3 x10x10^{-3}}{20} = 15\pi = \underline{47.12}$$

PROPRIETARY MATERIAL. © 2007 The McGraw-Hill Companies, Inc. All rights reserved. No part of this Manual may be displayed, reproduced or distributed in any form or by any means, without the prior written permission of the publisher, or used beyond the limited distribution to teachers and educators permitted by McGraw-Hill for their individual course preparation. If you are a student using this Manual, you are using it without permission.

Chapter 14, Problem 47.

Show that a series *LR* circuit is a lowpass filter if the output is taken across the resistor. Calculate the corner frequency f_c if $L = 2$ mH and $R = 10\ \text{k}\Omega$.

Chapter 14, Solution 47.

$$\mathbf{H}(\omega) = \frac{\mathbf{V}_o}{\mathbf{V}_i} = \frac{R}{R + j\omega L} = \frac{1}{1 + j\omega L/R}$$

$H(0) = 1$ and $H(\infty) = 0$ showing that this circuit is a lowpass filter.

At the corner frequency, $\left|H(\omega_c)\right| = \frac{1}{\sqrt{2}}$, i.e.

$$\frac{1}{\sqrt{2}} = \frac{1}{\sqrt{1 + \left(\frac{\omega_c L}{R}\right)^2}} \longrightarrow 1 = \frac{\omega_c L}{R} \qquad \text{or} \qquad \omega_c = \frac{R}{L}$$

Hence,

$$\omega_c = \frac{R}{L} = 2\pi f_c$$

$$f_c = \frac{1}{2\pi} \cdot \frac{R}{L} = \frac{1}{2\pi} \cdot \frac{10 \times 10^3}{2 \times 10^{-3}} = \underline{\mathbf{796\ kHz}}$$

PROPRIETARY MATERIAL. © 2007 The McGraw-Hill Companies, Inc. All rights reserved. No part of this Manual may be displayed, reproduced or distributed in any form or by any means, without the prior written permission of the publisher, or used beyond the limited distribution to teachers and educators permitted by McGraw-Hill for their individual course preparation. If you are a student using this Manual, you are using it without permission.

Chapter 14, Problem 48.

Find the transfer function $\mathbf{V}_o/\mathbf{V}_s$ of the circuit in Fig. 14.86. Show that the circuit is a lowpass filter.

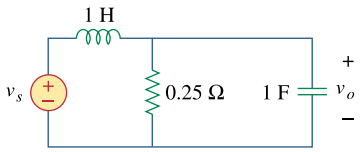

Figure 14.86
For Prob. 14.48.

Chapter 14, Solution 48.

$$\mathbf{H}(\omega) = \frac{R \parallel \dfrac{1}{j\omega C}}{j\omega L + R \parallel \dfrac{1}{j\omega C}}$$

$$\mathbf{H}(\omega) = \frac{\dfrac{R/j\omega C}{R + 1/j\omega C}}{j\omega L + \dfrac{R/j\omega C}{R + 1/j\omega C}}$$

$$\mathbf{H}(\omega) = \underline{\frac{\mathbf{R}}{\mathbf{R + j\omega L - \omega^2 RLC}}}$$

$H(0) = 1$ and $H(\infty) = 0$ showing that **<u>this circuit is a lowpass filter</u>**.

<u>PROPRIETARY MATERIAL</u>. © 2007 The McGraw-Hill Companies, Inc. All rights reserved. <u>No part of this Manual may be displayed, reproduced or distributed in any form or by any means, without the prior written permission of the publisher, or used beyond the limited distribution to teachers and educators permitted by McGraw-Hill for their individual course preparation. If you are a student using this Manual, you are using it without permission.</u>

Chapter 14, Problem 49.

Determine the cutoff frequency of the lowpass filter described by

$$\mathbf{H}(\omega) = \frac{4}{2 + j\omega 10}$$

Find the gain in dB and phase of $\mathbf{H}(\omega)$ at $\omega = 2$ rad/s.

Chapter 14, Solution 49.

At dc, $H(0) = \frac{4}{2} = 2$.

Hence, $$\left|H(\omega)\right| = \frac{1}{\sqrt{2}} H(0) = \frac{2}{\sqrt{2}}$$

$$\frac{2}{\sqrt{2}} = \frac{4}{\sqrt{4 + 100\omega_c^2}}$$

$$4 + 100\omega_c^2 = 8 \longrightarrow \omega_c = 0.2$$

$$H(2) = \frac{4}{2 + j20} = \frac{2}{1 + j10}$$

$$\left|H(2)\right| = \frac{2}{\sqrt{101}} = 0.199$$

In dB, $20\log_{10}\left|H(2)\right| = \underline{\mathbf{-14.023}}$

$\arg H(2) = -\tan^{-1}10 = \underline{\mathbf{-84.3°}}$

PROPRIETARY MATERIAL. © 2007 The McGraw-Hill Companies, Inc. All rights reserved. No part of this Manual may be displayed, reproduced or distributed in any form or by any means, without the prior written permission of the publisher, or used beyond the limited distribution to teachers and educators permitted by McGraw-Hill for their individual course preparation. If you are a student using this Manual, you are using it without permission.

Chapter 14, Problem 50.

Determine what type of filter is in Fig. 14.87. Calculate the corner frequency f_c.

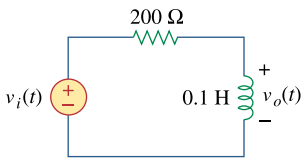

Figure 14.87
For Prob. 14.50.

Chapter 14, Solution 50.

$$\mathbf{H}(\omega) = \frac{\mathbf{V}_o}{\mathbf{V}_i} = \frac{j\omega L}{R + j\omega L}$$

$H(0) = 0$ and $H(\infty) = 1$ showing that **<u>this circuit is a highpass filter</u>**.

$$\mathbf{H}(\omega_c) = \frac{1}{\sqrt{2}} = \frac{1}{\sqrt{1 + \left(\frac{R}{\omega_c L}\right)^2}} \longrightarrow 1 = \frac{R}{\omega_c L}$$

or $$\omega_c = \frac{R}{L} = 2\pi f_c$$

$$f_c = \frac{1}{2\pi} \cdot \frac{R}{L} = \frac{1}{2\pi} \cdot \frac{200}{0.1} = \underline{\mathbf{318.3\ Hz}}$$

<u>PROPRIETARY MATERIAL</u>. © 2007 The McGraw-Hill Companies, Inc. All rights reserved. <u>No part of this Manual may be displayed, reproduced or distributed in any form or by any means, without the prior written permission of the publisher, or used beyond the limited distribution to teachers and educators permitted by McGraw-Hill for their individual course preparation. If you are a student using this Manual, you are using it without permission.</u>

Chapter 14, Problem 51.

Design an *RL* lowpass filter that uses a 40-mH coil and has a cutoff frequency of 5 kHz.

Chapter 14, Solution 51.

The lowpass RL filter is shown below.

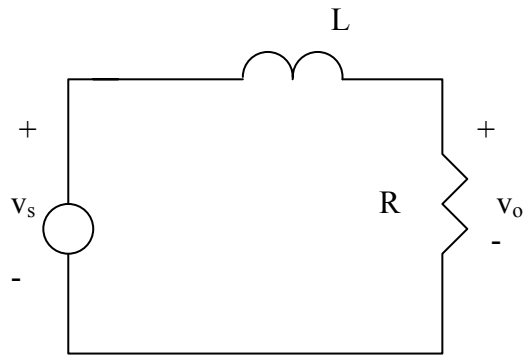

$$H = \frac{V_o}{V_s} = \frac{R}{R + j\omega L} = \frac{1}{1 + j\omega L / R}$$

$$\omega_c = \frac{R}{L} = 2\pi f_c \qquad \longrightarrow \qquad R = 2\pi f_c L = 2\pi x 5x10^3 x 40x10^{-3} = \underline{1.256k\Omega}$$

Chapter 14, Problem 52.

In a highpass *RL* filter with a cutoff frequency of 100 kHz, *L* = 40 mH. Find *R*.

Chapter 14, Solution 52.

$$\omega_c = \frac{R}{L} = 2\pi f_c$$

$$R = 2\pi f_c L = (2\pi)(10^5)(40 \times 10^{-3}) = \underline{\mathbf{25.13\ k\Omega}}$$

PROPRIETARY MATERIAL. © 2007 The McGraw-Hill Companies, Inc. All rights reserved. No part of this Manual may be displayed, reproduced or distributed in any form or by any means, without the prior written permission of the publisher, or used beyond the limited distribution to teachers and educators permitted by McGraw-Hill for their individual course preparation. If you are a student using this Manual, you are using it without permission.

Chapter 14, Problem 53.

Design a series *RLC* type bandpass filter with cutoff frequencies of 10 kHz and 11 kHz. Assuming $C = 80$ pF, find R, L, and Q.

Chapter 14, Solution 53.

$$\omega_1 = 2\pi f_1 = 20\pi \times 10^3$$
$$\omega_2 = 2\pi f_2 = 22\pi \times 10^3$$

$$B = \omega_2 - \omega_1 = 2\pi \times 10^3$$
$$\omega_0 = \frac{\omega_2 + \omega_1}{2} = 21\pi \times 10^3$$
$$Q = \frac{\omega_0}{B} = \frac{21\pi}{2\pi} = \underline{\mathbf{10.5}}$$

$$\omega_0 = \frac{1}{\sqrt{LC}} \longrightarrow L = \frac{1}{\omega_0^2 C}$$
$$L = \frac{1}{(21\pi \times 10^3)^2 (80 \times 10^{-12})} = \underline{\mathbf{2.872\ H}}$$

$$B = \frac{R}{L} \longrightarrow R = BL$$
$$R = (2\pi \times 10^3)(2.872) = \underline{\mathbf{18.045\ k\Omega}}$$

Chapter 14, Problem 54.

Design a passive bandstop filter with $\omega_o = 10$ rad/s and $Q = 20$.

Chapter 14, Solution 54.

This is an open-ended problem with several possible solutions. We may choose the bandstop filter in Fig. 14.38.

$$\omega_o = \frac{1}{\sqrt{LC}} = 10 \longrightarrow LC = 0.01$$
$$Q = \frac{\omega_o L}{R} = 10\, L/R = 20 \longrightarrow L = 2R$$

If we select L = 1H, then R=0.5 Ω, and C = 0.01/L = 10 mF.

PROPRIETARY MATERIAL. © 2007 The McGraw-Hill Companies, Inc. All rights reserved. No part of this Manual may be displayed, reproduced or distributed in any form or by any means, without the prior written permission of the publisher, or used beyond the limited distribution to teachers and educators permitted by McGraw-Hill for their individual course preparation. If you are a student using this Manual, you are using it without permission.

Chapter 14, Problem 55.

Determine the range of frequencies that will be passed by a series *RLC* bandpass filter with $R = 10\,\Omega$, $L = 25$mH, and $C = 0.4\ \mu$F. Find the quality factor.

Chapter 14, Solution 55.

$$\omega_o = \frac{1}{\sqrt{LC}} = \frac{1}{\sqrt{(25\times10^{-3})(0.4\times10^{-6})}} = 10 \text{ krad/s}$$

$$B = \frac{R}{L} = \frac{10}{25\times10^{-3}} = 0.4 \text{ krad/s}$$

$$Q = \frac{10}{0.4} = \underline{\mathbf{25}}$$

$$\omega_1 = \omega_o - B/2 = 10 - 0.2 = 9.8 \text{ krad/s} \qquad \text{or} \qquad f_1 = \frac{9.8}{2\pi} = 1.56 \text{ kHz}$$

$$\omega_2 = \omega_o + B/2 = 10 + 0.2 = 10.2 \text{ krad/s} \qquad \text{or} \qquad f_2 = \frac{10.2}{2\pi} = 1.62 \text{ kHz}$$

Therefore,

$$\underline{\mathbf{1.56 \text{ kHz} < f < 1.62 \text{ kHz}}}$$

PROPRIETARY MATERIAL. © 2007 The McGraw-Hill Companies, Inc. All rights reserved. No part of this Manual may be displayed, reproduced or distributed in any form or by any means, without the prior written permission of the publisher, or used beyond the limited distribution to teachers and educators permitted by McGraw-Hill for their individual course preparation. If you are a student using this Manual, you are using it without permission.

Chapter 14, Problem 56.

(a) Show that for a bandpass filter,

$$\mathbf{H}(s) = \frac{sB}{s^2 + sB + \omega_0^2}, \quad s = jw$$

where B = bandwidth of the filter and ω_o is the center frequency.

(b) Similarly, show that for a bandstop filter,

$$\mathbf{H}(s) = \frac{s^2 + \omega_0^2}{s^2 + sB + \omega_0^2}, \quad s = jw$$

Chapter 14, Solution 56.

(a) From Eq 14.54,

$$\mathbf{H}(s) = \frac{R}{R + sL + \frac{1}{sC}} = \frac{sRC}{1 + sRC + s^2LC} = \frac{s\frac{R}{L}}{s^2 + s\frac{R}{L} + \frac{1}{LC}}$$

Since $B = \frac{R}{L}$ and $\omega_0 = \frac{1}{\sqrt{LC}}$,

$$\mathbf{H}(s) = \underline{\frac{\mathbf{sB}}{\mathbf{s^2 + sB + \omega_0^2}}}$$

(b) From Eq. 14.56,

$$\mathbf{H}(s) = \frac{sL + \frac{1}{sC}}{R + sL + \frac{1}{sC}} = \frac{s^2 + \frac{1}{LC}}{s^2 + s\frac{R}{L} + \frac{1}{LC}}$$

$$\mathbf{H}(s) = \underline{\frac{\mathbf{s^2 + \omega_0^2}}{\mathbf{s^2 + sB + \omega_0^2}}}$$

PROPRIETARY MATERIAL. © 2007 The McGraw-Hill Companies, Inc. All rights reserved. No part of this Manual may be displayed, reproduced or distributed in any form or by any means, without the prior written permission of the publisher, or used beyond the limited distribution to teachers and educators permitted by McGraw-Hill for their individual course preparation. If you are a student using this Manual, you are using it without permission.

Chapter 14, Problem 57.

Determine the center frequency and bandwidth of the bandpass filters in Fig. 14.88.

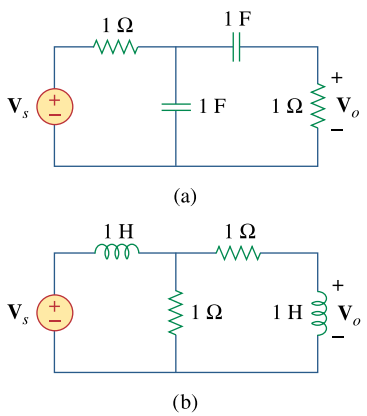

Figure 14.88
For Prob. 14.57.

PROPRIETARY MATERIAL. © 2007 The McGraw-Hill Companies, Inc. All rights reserved. No part of this Manual may be displayed, reproduced or distributed in any form or by any means, without the prior written permission of the publisher, or used beyond the limited distribution to teachers and educators permitted by McGraw-Hill for their individual course preparation. If you are a student using this Manual, you are using it without permission.

Chapter 14, Solution 57.

(a) Consider the circuit below.

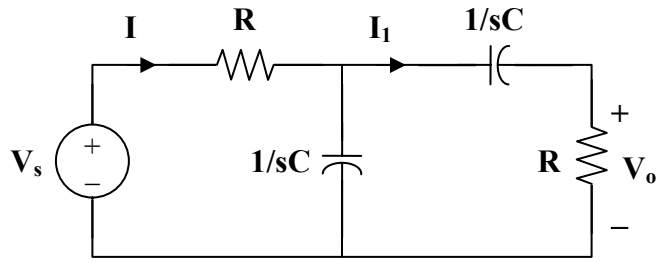

$$\mathbf{Z}(s) = R + \frac{1}{sC} \| \left(R + \frac{1}{sC} \right) = R + \frac{\frac{1}{sC}\left(R + \frac{1}{sC}\right)}{R + \frac{2}{sC}}$$

$$\mathbf{Z}(s) = R + \frac{1 + sRC}{sC(2 + sRC)}$$

$$\mathbf{Z}(s) = \frac{1 + 3sRC + s^2R^2C^2}{sC(2 + sRC)}$$

$$\mathbf{I} = \frac{\mathbf{V}_s}{\mathbf{Z}}$$

$$\mathbf{I}_1 = \frac{1/sC}{2/sC + R}\mathbf{I} = \frac{\mathbf{V}_s}{\mathbf{Z}(2 + sRC)}$$

$$\mathbf{V}_o = \mathbf{I}_1 R = \frac{R\,\mathbf{V}_s}{2 + sRC} \cdot \frac{sC(2 + sRC)}{1 + 3sRC + s^2R^2C^2}$$

$$\mathbf{H}(s) = \frac{\mathbf{V}_o}{\mathbf{V}_s} = \frac{sRC}{1 + 3sRC + s^2R^2C^2}$$

$$\mathbf{H}(s) = \frac{1}{3}\left[\frac{\frac{3}{RC}s}{s^2 + \frac{3}{RC}s + \frac{1}{R^2C^2}} \right]$$

Thus, $\omega_0^2 = \dfrac{1}{R^2C^2}$ or $\omega_0 = \dfrac{1}{RC} = \underline{\mathbf{1\ rad/s}}$

$$B = \frac{3}{RC} = \underline{\mathbf{3\ rad/s}}$$

PROPRIETARY MATERIAL. © 2007 The McGraw-Hill Companies, Inc. All rights reserved. No part of this Manual may be displayed, reproduced or distributed in any form or by any means, without the prior written permission of the publisher, or used beyond the limited distribution to teachers and educators permitted by McGraw-Hill for their individual course preparation. If you are a student using this Manual, you are using it without permission.

(b) Similarly,

$$\mathbf{Z}(s) = sL + R \parallel (R + sL) = sL + \frac{R\,(R + sL)}{2R + sL}$$

$$\mathbf{Z}(s) = \frac{R^2 + 3sRL + s^2L^2}{2R + sL}$$

$$\mathbf{I} = \frac{\mathbf{V}_s}{\mathbf{Z}}, \qquad \mathbf{I}_1 = \frac{R}{2R + sL}\mathbf{I} = \frac{R\,\mathbf{V}_s}{\mathbf{Z}\,(2R + sL)}$$

$$\mathbf{V}_o = \mathbf{I}_1 \cdot sL = \frac{sLR\,\mathbf{V}_s}{2R + sL} \cdot \frac{2R + sL}{R^2 + 3sRL + s^2L^2}$$

$$\mathbf{H}(s) = \frac{\mathbf{V}_o}{\mathbf{V}_s} = \frac{sRL}{R^2 + 3sRL + s^2L^2} = \frac{\frac{1}{3}\left(\frac{3R}{L}s\right)}{s^2 + \frac{3R}{L}s + \frac{R^2}{L^2}}$$

Thus, $\omega_0 = \frac{R}{L} = \underline{\mathbf{1\ rad/s}}$

$$B = \frac{3R}{L} = \underline{\mathbf{3\ rad/s}}$$

PROPRIETARY MATERIAL. © 2007 The McGraw-Hill Companies, Inc. All rights reserved. No part of this Manual may be displayed, reproduced or distributed in any form or by any means, without the prior written permission of the publisher, or used beyond the limited distribution to teachers and educators permitted by McGraw-Hill for their individual course preparation. If you are a student using this Manual, you are using it without permission.

Chapter 14, Problem 58.

The circuit parameters for a series *RLC* bandstop filter are $R = 2\ \text{k}\Omega$, $L = 0.1$ H, $C = 40$ pF. Calculate:

(a) the center frequency

(b) the half-power frequencies

(c) the quality factor

Chapter 14, Solution 58.

(a) $$\omega_0 = \frac{1}{\sqrt{LC}} = \frac{1}{\sqrt{(0.1)(40\times10^{-12})}} = \underline{\mathbf{0.5\times10^6\ rad/s}}$$

(b) $$B = \frac{R}{L} = \frac{2\times10^3}{0.1} = 2\times10^4$$

$$Q = \frac{\omega_0}{B} = \frac{0.5\times10^6}{2\times10^4} = 25$$

As a high Q circuit,

$$\omega_1 = \omega_0 - \frac{B}{2} = 10^4\,(50-1) = \underline{\mathbf{490\ krad/s}}$$

$$\omega_2 = \omega_0 + \frac{B}{2} = 10^4\,(50+1) = \underline{\mathbf{510\ krad/s}}$$

(c) As seen in part (b), $Q = \underline{\mathbf{25}}$

PROPRIETARY MATERIAL. © 2007 The McGraw-Hill Companies, Inc. All rights reserved. No part of this Manual may be displayed, reproduced or distributed in any form or by any means, without the prior written permission of the publisher, or used beyond the limited distribution to teachers and educators permitted by McGraw-Hill for their individual course preparation. If you are a student using this Manual, you are using it without permission.

Chapter 14, Problem 59.

Find the bandwidth and center frequency of the bandstop filter of Fig. 14.89.

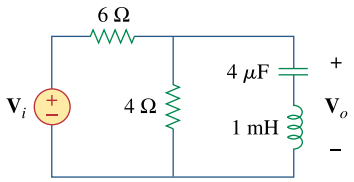

Figure 14.89
For Prob. 14.59.

Chapter 14, Solution 59.

Consider the circuit below.

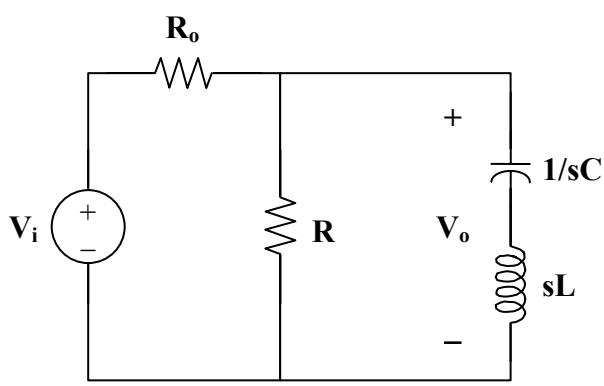

$$\mathbf{Z}(s) = R \,||\left(sL + \frac{1}{sC}\right) = \frac{R\,(sL + 1/sC)}{R + sL + 1/sC}$$

$$\mathbf{Z}(s) = \frac{R\,(1 + s^2LC)}{1 + sRC + s^2LC}$$

PROPRIETARY MATERIAL. © 2007 The McGraw-Hill Companies, Inc. All rights reserved. No part of this Manual may be displayed, reproduced or distributed in any form or by any means, without the prior written permission of the publisher, or used beyond the limited distribution to teachers and educators permitted by McGraw-Hill for their individual course preparation. If you are a student using this Manual, you are using it without permission.

$$\mathbf{H} = \frac{\mathbf{V}_o}{\mathbf{V}_i} = \frac{\mathbf{Z}}{\mathbf{Z} + R_o} = \frac{R(1 + s^2LC)}{R_o + sRR_oC + s^2LCR_o + R + s^2LCR}$$

$$\mathbf{Z}_{in} = R_o + \mathbf{Z} = R_o + \frac{R(1 + s^2LC)}{1 + sRC + s^2LC}$$

$$\mathbf{Z}_{in} = \frac{R_o + sRR_oC + s^2LCR_o + R + s^2LCR}{1 + sRC + s^2LC}$$

$$s = j\omega$$

$$\mathbf{Z}_{in} = \frac{R_o + j\omega RR_oC - \omega^2LCR_o + R - \omega^2LCR}{1 - \omega^2LC + j\omega RC}$$

$$\mathbf{Z}_{in} = \frac{(R_o + R - \omega^2LCR_o - \omega^2LCR + j\omega RR_oC)(1 - \omega^2LC - j\omega RC)}{(1 - \omega^2LC)^2 + (\omega RC)^2}$$

$\mathrm{Im}(\mathbf{Z}_{in}) = 0$ implies that

$$-\omega RC[R_o + R - \omega^2LCR_o - \omega^2LCR] + \omega RR_oC(1 - \omega^2LC) = 0$$

$$R_o + R - \omega^2LCR_o - \omega^2LCR - R_o + \omega^2LCR_o = 0$$

$$\omega^2LCR = R$$

$$\omega_0 = \frac{1}{\sqrt{LC}} = \frac{1}{\sqrt{(1\times10^{-3})(4\times10^{-6})}} = \underline{\mathbf{15.811\ krad/s}}$$

$$\mathbf{H} = \frac{R(1 - \omega^2LC)}{R_o + j\omega RR_oC + R - \omega^2LCR_o - \omega^2LCR}$$

$$H_{max} = H(0) = \frac{R}{R_o + R}$$

or $$H_{max} = H(\infty) = \lim_{\omega\to\infty} \frac{R\left(\frac{1}{\omega^2} - LC\right)}{\frac{R_o + R}{\omega^2} + j\frac{RR_oC}{\omega} - LC(R + R_o)} = \frac{R}{R + R_o}$$

PROPRIETARY MATERIAL. © 2007 The McGraw-Hill Companies, Inc. All rights reserved. No part of this Manual may be displayed, reproduced or distributed in any form or by any means, without the prior written permission of the publisher, or used beyond the limited distribution to teachers and educators permitted by McGraw-Hill for their individual course preparation. If you are a student using this Manual, you are using it without permission.

At ω_1 and ω_2, $|\mathbf{H}| = \frac{1}{\sqrt{2}} H_{mzx}$

$$\frac{R}{\sqrt{2}(R_o + R)} = \left| \frac{R(1-\omega^2 LC)}{R_o + R - \omega^2 LC(R_o + R) + j\omega R R_o C} \right|$$

$$\frac{1}{\sqrt{2}} = \frac{(R_o + R)(1-\omega^2 LC)}{\sqrt{(\omega R R_o C)^2 + (R_o + R - \omega^2 LC(R_o + R))^2}}$$

$$\frac{1}{\sqrt{2}} = \frac{10(1-\omega^2 \cdot 4\times 10^{-9})}{\sqrt{(96\times 10^{-6}\omega)^2 + (10-\omega^2 \cdot 4\times 10^{-8})^2}}$$

$$0 = \frac{10(1-\omega^2 \cdot 4\times 10^{-9})}{\sqrt{(96\times 10^{-6}\omega)^2 + (10-\omega^2 \cdot 4\times 10^{-8})^2}} - \frac{1}{\sqrt{2}}$$

$$(10-\omega^2 \cdot 4\times 10^{-8})(\sqrt{2}) - \sqrt{(96\times 10^{-6}\omega)^2 + (10-\omega^2 \cdot 4\times 10^{-8})^2} = 0$$

$$(2)(10-\omega^2 \cdot 4\times 10^{-8})^2 = (96\times 10^{-6}\omega)^2 + (10-\omega^2 \cdot 4\times 10^{-8})^2$$

$$(96\times 10^{-6}\omega)^2 - (10-\omega^2 \cdot 4\times 10^{-8})^2 = 0$$

$$1.6\times 10^{-15}\omega^4 - 8.092\times 10^{-7}\omega^2 + 100 = 0$$

$$\omega^4 - 5.058\times 10^8 + 6.25\times 10^{16} = 0$$

$$\omega^2 = \begin{cases} 2.9109\times 10^8 \\ 2.1471\times 10^8 \end{cases}$$

Hence,

$$\omega_1 = 14.653 \text{ krad/s}$$

$$\omega_2 = 17.061 \text{ krad/s}$$

$$B = \omega_2 - \omega_1 = 17.061 - 14.653 = \underline{\mathbf{2.408 \text{ krad/s}}}$$

PROPRIETARY MATERIAL. © 2007 The McGraw-Hill Companies, Inc. All rights reserved. No part of this Manual may be displayed, reproduced or distributed in any form or by any means, without the prior written permission of the publisher, or used beyond the limited distribution to teachers and educators permitted by McGraw-Hill for their individual course preparation. If you are a student using this Manual, you are using it without permission.

Chapter 14, Problem 60.

Obtain the transfer function of a highpass filter with a passband gain of 10 and a cutoff frequency of 50 rad/s.

Chapter 14, Solution 60.

$$\mathbf{H}'(\omega) = \frac{j\omega RC}{1 + j\omega RC} = \frac{j\omega}{j\omega + 1/RC} \qquad \text{(from Eq. 14.52)}$$

This has a unity passband gain, i.e. $H(\infty) = 1$.

$$\frac{1}{RC} = \omega_c = 50$$

$$\mathbf{H}^{\wedge}(\omega) = 10\,\mathbf{H}'(\omega) = \frac{j10\omega}{50 + j\omega}$$

$$\mathbf{H}(\omega) = \underline{\frac{\mathbf{j10\omega}}{\mathbf{50 + j\omega}}}$$

PROPRIETARY MATERIAL. © 2007 The McGraw-Hill Companies, Inc. All rights reserved. No part of this Manual may be displayed, reproduced or distributed in any form or by any means, without the prior written permission of the publisher, or used beyond the limited distribution to teachers and educators permitted by McGraw-Hill for their individual course preparation. If you are a student using this Manual, you are using it without permission.

Chapter 14, Problem 61.

Find the transfer function for each of the active filters in Fig. 14.90.

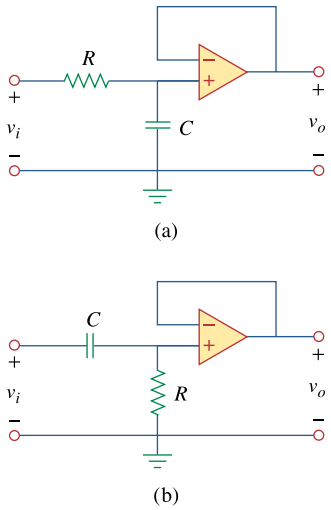

Figure 14.90
For Probs. 14.61 and 14.62.

Chapter 14, Solution 61.

(a) $$\mathbf{V}_+ = \frac{1/j\omega C}{R + 1/j\omega C}\mathbf{V}_i, \qquad \mathbf{V}_- = \mathbf{V}_o$$

Since $\mathbf{V}_+ = \mathbf{V}_-$,

$$\frac{1}{1 + j\omega RC}\mathbf{V}_i = \mathbf{V}_o$$

$$\mathbf{H}(\omega) = \frac{\mathbf{V}_o}{\mathbf{V}_i} = \underline{\frac{\mathbf{1}}{\mathbf{1 + j\omega RC}}}$$

(b) $$\mathbf{V}_+ = \frac{R}{R + 1/j\omega C}\mathbf{V}_i, \qquad \mathbf{V}_- = \mathbf{V}_o$$

Since $\mathbf{V}_+ = \mathbf{V}_-$,

$$\frac{j\omega RC}{1 + j\omega RC}\mathbf{V}_i = \mathbf{V}_o$$

$$\mathbf{H}(\omega) = \frac{\mathbf{V}_o}{\mathbf{V}_i} = \underline{\frac{\mathbf{j\omega RC}}{\mathbf{1 + j\omega RC}}}$$

PROPRIETARY MATERIAL. © 2007 The McGraw-Hill Companies, Inc. All rights reserved. No part of this Manual may be displayed, reproduced or distributed in any form or by any means, without the prior written permission of the publisher, or used beyond the limited distribution to teachers and educators permitted by McGraw-Hill for their individual course preparation. If you are a student using this Manual, you are using it without permission.

Chapter 14, Problem 62.

The filter in Fig. 14.90(b) has a 3-dB cutoff frequency at 1 kHz. If its input is connected to a 120-mV variable frequency signal, find the output voltage at:

(a) 200 Hz (b) 2 kHz (c) 10 kHz

Chapter 14, Solution 62.

This is a highpass filter.

$$\mathbf{H}(\omega) = \frac{j\omega RC}{1 + j\omega RC} = \frac{1}{1 - j/\omega RC}$$

$$\mathbf{H}(\omega) = \frac{1}{1 - j\omega_c/\omega}, \qquad \omega_c = \frac{1}{RC} = 2\pi(1000)$$

$$\mathbf{H}(\omega) = \frac{1}{1 - jf_c/f} = \frac{1}{1 - j1000/f}$$

(a) $$\mathbf{H}(f = 200\text{ Hz}) = \frac{1}{1 - j5} = \frac{\mathbf{V}_o}{\mathbf{V}_i}$$

$$|\mathbf{V}_o| = \frac{120\text{ mV}}{|1 - j5|} = \underline{\mathbf{23.53\ mV}}$$

(b) $$\mathbf{H}(f = 2\text{ kHz}) = \frac{1}{1 - j0.5} = \frac{\mathbf{V}_o}{\mathbf{V}_i}$$

$$|\mathbf{V}_o| = \frac{120\text{ mV}}{|1 - j0.5|} = \underline{\mathbf{107.3\ mV}}$$

(c) $$\mathbf{H}(f = 10\text{ kHz}) = \frac{1}{1 - j0.1} = \frac{\mathbf{V}_o}{\mathbf{V}_i}$$

$$|\mathbf{V}_o| = \frac{120\text{ mV}}{|1 - j0.1|} = \underline{\mathbf{119.4\ mV}}$$

PROPRIETARY MATERIAL. © 2007 The McGraw-Hill Companies, Inc. All rights reserved. No part of this Manual may be displayed, reproduced or distributed in any form or by any means, without the prior written permission of the publisher, or used beyond the limited distribution to teachers and educators permitted by McGraw-Hill for their individual course preparation. If you are a student using this Manual, you are using it without permission.

Chapter 14, Problem 63.

Design an active first-order highpass filter with

$$\mathbf{H}(s) = -\frac{100s}{s+10}, \qquad s = j\omega$$

Use a 1-μF capacitor.

Chapter 14, Solution 63.

For an active highpass filter,

$$H(s) = -\frac{sC_iR_f}{1+sC_iR_i} \tag{1}$$

But

$$H(s) = -\frac{10s}{1+s/10} \tag{2}$$

Comparing (1) and (2) leads to:

$$C_iR_f = 10 \quad \longrightarrow \quad R_f = \frac{10}{C_i} = \underline{10\text{M}\Omega}$$

$$C_iR_i = 0.1 \quad \longrightarrow \quad R_i = \frac{0.1}{C_i} = \underline{100\text{k}\Omega}$$

PROPRIETARY MATERIAL. © 2007 The McGraw-Hill Companies, Inc. All rights reserved. No part of this Manual may be displayed, reproduced or distributed in any form or by any means, without the prior written permission of the publisher, or used beyond the limited distribution to teachers and educators permitted by McGraw-Hill for their individual course preparation. If you are a student using this Manual, you are using it without permission.

Chapter 14, Problem 64.

Obtain the transfer function of the active filter in Fig. 14.91 on the next page. What kind of filter is it?

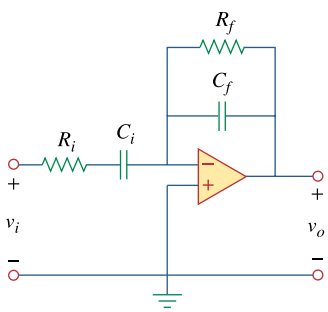

Figure 14.91
For Prob. 14.64.

Chapter 14, Solution 64.

$$Z_f = R_f \parallel \frac{1}{j\omega C_f} = \frac{R_f}{1 + j\omega R_f C_f}$$

$$Z_i = R_i + \frac{1}{j\omega C_i} = \frac{1 + j\omega R_i C_i}{j\omega C_i}$$

Hence,

$$\mathbf{H}(\omega) = \frac{\mathbf{V}_o}{\mathbf{V}_i} = \frac{-\mathbf{Z}_f}{\mathbf{Z}_i} = \underline{\frac{-j\omega \mathbf{R}_f \mathbf{C}_i}{(1 + j\omega \mathbf{R}_f \mathbf{C}_f)(1 + j\omega \mathbf{R}_i \mathbf{C}_i)}}$$

<u>This is a bandpass filter</u>. $\mathbf{H}(\omega)$ is similar to the product of the transfer function of a lowpass filter and a highpass filter.

<u>PROPRIETARY MATERIAL</u>. © 2007 The McGraw-Hill Companies, Inc. All rights reserved. <u>No part of this Manual may be displayed, reproduced or distributed in any form or by any means, without the prior written permission of the publisher, or used beyond the limited distribution to teachers and educators permitted by McGraw-Hill for their individual course preparation. If you are a student using this Manual, you are using it without permission.</u>

Chapter 14, Problem 65.

A highpass filter is shown in Fig. 14.92. Show that the transfer function is

$$\mathbf{H}(\omega) = \left(1 + \frac{R_f}{R_i}\right)\frac{j\omega RC}{1 + j\omega RC}$$

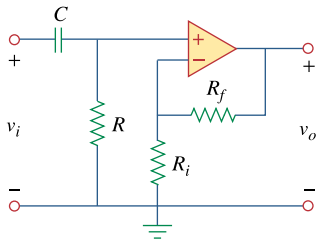

Figure 14.92
For Prob. 14.65.

Chapter 14, Solution 65.

$$\mathbf{V}_+ = \frac{R}{R + 1/j\omega C}\mathbf{V}_i = \frac{j\omega RC}{1 + j\omega RC}\mathbf{V}_i$$

$$\mathbf{V}_- = \frac{R_i}{R_i + R_f}\mathbf{V}_o$$

Since $\mathbf{V}_+ = \mathbf{V}_-$,

$$\frac{R_i}{R_i + R_f}\mathbf{V}_o = \frac{j\omega RC}{1 + j\omega RC}\mathbf{V}_i$$

$$\mathbf{H}(\omega) = \frac{\mathbf{V}_o}{\mathbf{V}_i} = \underline{\left(\mathbf{1} + \frac{\mathbf{R_f}}{\mathbf{R_i}}\right)\left(\frac{\mathbf{j\omega RC}}{\mathbf{1 + j\omega RC}}\right)}$$

It is evident that as $\omega \to \infty$, the gain is $\underline{\mathbf{1} + \frac{\mathbf{R_f}}{\mathbf{R_i}}}$ and that the corner frequency is $\underline{\frac{\mathbf{1}}{\mathbf{RC}}}$.

PROPRIETARY MATERIAL. © 2007 The McGraw-Hill Companies, Inc. All rights reserved. No part of this Manual may be displayed, reproduced or distributed in any form or by any means, without the prior written permission of the publisher, or used beyond the limited distribution to teachers and educators permitted by McGraw-Hill for their individual course preparation. If you are a student using this Manual, you are using it without permission.

Chapter 14, Problem 66.

A "general" first-order filter is shown in Fig. 14.93.

(a) Show that the transfer function is

$$\mathbf{H}(s) = \frac{R_4}{R_3 + R_4} \times \frac{s + (1/R_1C)[R_1/R_2 - R_3/R_4]}{s + 1/R_2C}$$

$s = j\omega$

(b) What condition must be satisfied for the circuit to operate as a highpass filter?

(c) What condition must be satisfied for the circuit to operate as a lowpass filter?

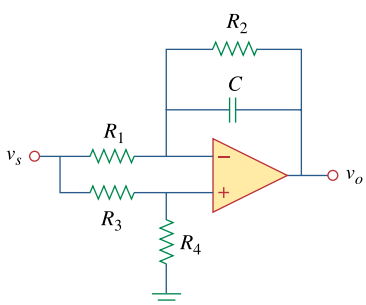

Figure 14.93
For Prob. 14.66.

Chapter 14, Solution 66.

(a) **Proof**

(b) When $\mathbf{R_1R_4 = R_2R_3}$,

$$\mathbf{H}(s) = \frac{R_4}{R_3 + R_4} \cdot \frac{s}{s + 1/R_2C}$$

(c) When $\mathbf{R_3 \to \infty}$,

$$\mathbf{H}(s) = \frac{-1/R_1C}{s + 1/R_2C}$$

PROPRIETARY MATERIAL. © 2007 The McGraw-Hill Companies, Inc. All rights reserved. No part of this Manual may be displayed, reproduced or distributed in any form or by any means, without the prior written permission of the publisher, or used beyond the limited distribution to teachers and educators permitted by McGraw-Hill for their individual course preparation. If you are a student using this Manual, you are using it without permission.

Chapter 14, Problem 67.

Design an active lowpass filter with dc gain of 0.25 and a corner frequency of 500 Hz.

Chapter 14, Solution 67.

$$\text{DC gain} = \frac{R_f}{R_i} = \frac{1}{4} \quad \longrightarrow \quad R_i = 4R_f$$

$$\text{Corner frequency} = \omega_c = \frac{1}{R_f C_f} = 2\pi(500)\ \text{rad/s}$$

If we select $R_f = 20\ \text{k}\Omega$, then $R_i = 80\ \text{k}\Omega$ and

$$C = \frac{1}{(2\pi)(500)(20\times10^3)} = 15.915\ \text{nF}$$

Therefore, if $R_f =$ **20 kΩ**, then $R_i =$ **80 kΩ** and $C =$ **15.915 nF**

Chapter 14, Problem 68.

Design an active highpass filter with a high-frequency gain of 5 and a corner frequency of 200 Hz.

Chapter 14, Solution 68.

$$\text{High frequency gain} = 5 = \frac{R_f}{R_i} \quad \longrightarrow \quad R_f = 5R_i$$

$$\text{Corner frequency} = \omega_c = \frac{1}{R_i C_i} = 2\pi(200)\ \text{rad/s}$$

If we select $R_i = 20\ \text{k}\Omega$, then $R_f = 100\ \text{k}\Omega$ and

$$C = \frac{1}{(2\pi)(200)(20\times10^3)} = 39.8\ \text{nF}$$

Therefore, if $R_i =$ **20 kΩ**, then $R_f =$ **100 kΩ** and $C =$ **39.8 nF**

PROPRIETARY MATERIAL. © 2007 The McGraw-Hill Companies, Inc. All rights reserved. No part of this Manual may be displayed, reproduced or distributed in any form or by any means, without the prior written permission of the publisher, or used beyond the limited distribution to teachers and educators permitted by McGraw-Hill for their individual course preparation. If you are a student using this Manual, you are using it without permission.

Chapter 14, Problem 69.

Design the filter in Fig. 14.94 to meet the following requirements:

(a) It must attenuate a signal at 2 kHz by 3 dB compared with its value at 10 MHz.

(b) It must provide a steady-state output of $v_o(t) = 10\sin(2\pi \times 10^8 t + 180^o)$ V for an input $v_s(t) = 4\sin(2\pi \times 10^8 t)$ V.

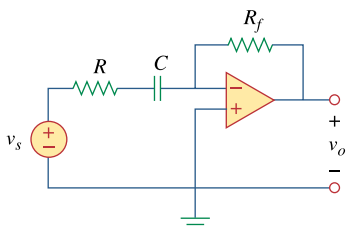

Figure 14.94
For Prob. 14.69.

Chapter 14, Solution 69.

This is a highpass filter with $f_c = 2$ kHz.

$$\omega_c = 2\pi f_c = \frac{1}{RC}$$

$$RC = \frac{1}{2\pi f_c} = \frac{1}{4\pi \times 10^3}$$

10^8 Hz may be regarded as high frequency. Hence the high-frequency gain is

$$\frac{-R_f}{R} = \frac{-10}{4} \qquad \text{or} \qquad R_f = 2.5R$$

If we let $R = \underline{\mathbf{10\ k\Omega}}$, then $R_f = \underline{\mathbf{25\ k\Omega}}$, and $C = \dfrac{1}{4000\pi \times 10^4} = \underline{\mathbf{7.96\ nF}}$.

PROPRIETARY MATERIAL. © 2007 The McGraw-Hill Companies, Inc. All rights reserved. No part of this Manual may be displayed, reproduced or distributed in any form or by any means, without the prior written permission of the publisher, or used beyond the limited distribution to teachers and educators permitted by McGraw-Hill for their individual course preparation. If you are a student using this Manual, you are using it without permission.

Chapter 14, Problem 70.

* A second-order active filter known as a Butterworth filter is shown in Fig. 14.95.

(a) Find the transfer function $\mathbf{V}_o/\mathbf{V}_i$.

(b) Show that it is a lowpass filter.

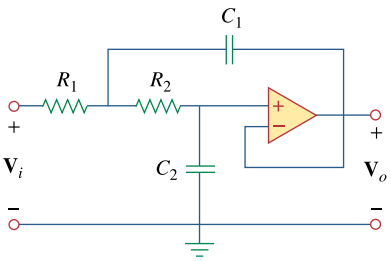

Figure 14.95
For Prob. 14.70.

* an asterisk indicates a challenging problem.

Chapter 14, Solution 70.

(a) $$\mathbf{H}(s) = \frac{\mathbf{V}_o(s)}{\mathbf{V}_i(s)} = \frac{Y_1 Y_2}{Y_1 Y_2 + Y_4 (Y_1 + Y_2 + Y_3)}$$

where $Y_1 = \dfrac{1}{R_1} = G_1$, $Y_2 = \dfrac{1}{R_2} = G_2$, $Y_3 = sC_1$, $Y_4 = sC_2$.

$$\mathbf{H}(s) = \underline{\frac{\mathbf{G_1 G_2}}{\mathbf{G_1 G_2 + sC_2 (G_1 + G_2 + sC_1)}}}$$

(b) $$H(0) = \frac{G_1 G_2}{G_1 G_2} = 1, \qquad H(\infty) = 0$$

showing that **<u>this circuit is a lowpass filter</u>**.

<u>PROPRIETARY MATERIAL</u>. © 2007 The McGraw-Hill Companies, Inc. All rights reserved. <u>No part of this Manual may be displayed, reproduced or distributed in any form or by any means, without the prior written permission of the publisher, or used beyond the limited distribution to teachers and educators permitted by McGraw-Hill for their individual course preparation. If you are a student using this Manual, you are using it without permission.</u>

Chapter 14, Problem 71.

Use magnitude and frequency scaling on the circuit of Fig. 14.76 to obtain an equivalent circuit in which the inductor and capacitor have magnitude 1 H and 1 F respectively.

Chapter 14, Solution 71.

$R = 50\,\Omega,\ L = 40\text{ mH},\ C = 1\,\mu\text{F}$

$$L' = \frac{K_m}{K_f}L \longrightarrow 1 = \frac{K_m}{K_f}\cdot(40\times10^{-3})$$

$$25K_f = K_m \qquad (1)$$

$$C' = \frac{C}{K_m K_f} \longrightarrow 1 = \frac{10^{-6}}{K_m K_f}$$

$$10^6 K_f = \frac{1}{K_m} \qquad (2)$$

Substituting (1) into (2),

$$10^6 K_f = \frac{1}{25K_f}$$

$$K_f = \underline{\mathbf{0.2\times10^{-3}}}$$

$$K_m = 25K_f = \underline{\mathbf{5\times10^{-3}}}$$

PROPRIETARY MATERIAL. © 2007 The McGraw-Hill Companies, Inc. All rights reserved. No part of this Manual may be displayed, reproduced or distributed in any form or by any means, without the prior written permission of the publisher, or used beyond the limited distribution to teachers and educators permitted by McGraw-Hill for their individual course preparation. If you are a student using this Manual, you are using it without permission.

Chapter 14, Problem 72.

What values of K_m and K_f will scale a 4-mH inductor and a 20-μF capacitor to 1 H and 2 F respectively?

Chapter 14, Solution 72.

$$L'C' = \frac{LC}{K_f^2} \longrightarrow K_f^2 = \frac{LC}{L'C'}$$

$$K_f^2 = \frac{(4\times10^{-3})(20\times10^{-6})}{(1)(2)} = 4\times10^{-8}$$

$$K_f = \underline{\mathbf{2\times10^{-4}}}$$

$$\frac{L'}{C'} = \frac{L}{C}K_m^2 \longrightarrow K_m^2 = \frac{L'}{C'}\cdot\frac{C}{L}$$

$$K_m^2 = \frac{(1)(20\times10^{-6})}{(2)(4\times10^{-3})} = 2.5\times10^{-3}$$

$$K_m = \underline{\mathbf{5\times10^{-2}}}$$

Chapter 14, Problem 73.

Calculate the values of *R*, *L*, and *C* that will result in $R = 12\text{k}\Omega$, $L = 40\ \mu$H and $C = 300$ nF respectively when magnitude-scaled by 800 and frequency-scaled by 1000.

Chapter 14, Solution 73.

$$R' = K_m R = (12)(800\times10^3) = \underline{\mathbf{9.6\ M\Omega}}$$

$$L' = \frac{K_m}{K_f}L = \frac{800}{1000}(40\times10^{-6}) = \underline{\mathbf{32\ \mu F}}$$

$$C' = \frac{C}{K_m K_f} = \frac{300\times10^{-9}}{(800)(1000)} = \underline{\mathbf{0.375\ pF}}$$

PROPRIETARY MATERIAL. © 2007 The McGraw-Hill Companies, Inc. All rights reserved. No part of this Manual may be displayed, reproduced or distributed in any form or by any means, without the prior written permission of the publisher, or used beyond the limited distribution to teachers and educators permitted by McGraw-Hill for their individual course preparation. If you are a student using this Manual, you are using it without permission.

Chapter 14, Problem 74.

A circuit has $R_1 = 3\ \Omega$, $R_2 = 10\Omega$, $L = 2$H and $C = 1/10$F. After the circuit is magnitude-scaled by 100 and frequency-scaled by 10^6, find the new values of the circuit elements.

Chapter 14, Solution 74.

$$R'_1 = K_m R_1 = 3x100 = \underline{300\Omega}$$

$$R'_2 = K_m R_2 = 10x100 = \underline{1\,k\Omega}$$

$$L' = \frac{K_m}{K_f} L = \frac{10^2}{10^6}(2) = \underline{200\,\mu H}$$

$$C' = \frac{C}{K_m K_f} = \frac{\frac{1}{10}}{10^8} = \underline{1\,nF}$$

Chapter 14, Problem 75.

In an *RLC* circuit, $R = 20\Omega$, $L = 4$ H and $C = 1$ F. The circuit is magnitude-scaled by 10 and frequency-scaled by 10^5. Calculate the new values of the elements.

Chapter 14, Solution 75.

$$R' = K_m R = 20x10 = \underline{200\,\Omega}$$

$$L' = \frac{K_m}{K_f} L = \frac{10}{10^5}(4) = \underline{400\,\mu H}$$

$$C' = \frac{C}{K_m K_f} = \frac{1}{10x10^5} = \underline{1\,\mu F}$$

PROPRIETARY MATERIAL. © 2007 The McGraw-Hill Companies, Inc. All rights reserved. No part of this Manual may be displayed, reproduced or distributed in any form or by any means, without the prior written permission of the publisher, or used beyond the limited distribution to teachers and educators permitted by McGraw-Hill for their individual course preparation. If you are a student using this Manual, you are using it without permission.

Chapter 14, Problem 76.

Given a parallel *RLC* circuit with $R = 5\ \text{k}\Omega$, $L = 10$ mH, and $C = 20\ \mu$F, if the circuit is magnitude-scaled by $K_m = 500$ and frequency-scaled by $K_f = 10^5$, find the resulting values of *R*, *L*, and *C*.

Chapter 14, Solution 76.

$$R' = K_m R = 500x5x10^3 = \underline{25\ \text{M}\Omega}$$

$$L' = \frac{K_m}{K_f} L = \frac{500}{10^5}(10mH) = \underline{50\ \mu\text{H}}$$

$$C' = \frac{C}{K_m K_f} = \frac{20x10^{-6}}{500x10^5} = \underline{0.4\ \text{pF}}$$

PROPRIETARY MATERIAL. © 2007 The McGraw-Hill Companies, Inc. All rights reserved. No part of this Manual may be displayed, reproduced or distributed in any form or by any means, without the prior written permission of the publisher, or used beyond the limited distribution to teachers and educators permitted by McGraw-Hill for their individual course preparation. If you are a student using this Manual, you are using it without permission.

Chapter 14, Problem 77.

A series *RLC* circuit has $R = 10\,\Omega$, $\omega_0 = 40$ rad/s, and $B = 5$ rad/s. Find *L* and *C* when the circuit is scaled:

(a) in magnitude by a factor of 600,

(b) in frequency by a factor of 1,000,

(c) in magnitude by a factor of 400 and in frequency by a factor of 10^5.

Chapter 14, Solution 77.

L and C are needed before scaling.

$$B = \frac{R}{L} \longrightarrow L = \frac{R}{B} = \frac{10}{5} = 2\text{ H}$$

$$\omega_0 = \frac{1}{\sqrt{LC}} \longrightarrow C = \frac{1}{\omega_0^2 L} = \frac{1}{(1600)(2)} = 312.5\ \mu\text{F}$$

(a) $L' = K_m L = (600)(2) = \underline{\mathbf{1200\ H}}$

$$C' = \frac{C}{K_m} = \frac{3.125\times10^{-4}}{600} = \underline{\mathbf{0.5208\ \mu F}}$$

(b) $L' = \dfrac{L}{K_f} = \dfrac{2}{10^3} = \underline{\mathbf{2\ mH}}$

$$C' = \frac{C}{K_f} = \frac{3.125\times10^{-4}}{10^3} = \underline{\mathbf{312.5\ nF}}$$

(c) $L' = \dfrac{K_m}{K_f} L = \dfrac{(400)(2)}{10^5} = \underline{\mathbf{8\ mH}}$

$$C' = \frac{C}{K_m K_f} = \frac{3.125\times10^{-4}}{(400)(10^5)} = \underline{\mathbf{7.81\ pF}}$$

PROPRIETARY MATERIAL. © 2007 The McGraw-Hill Companies, Inc. All rights reserved. No part of this Manual may be displayed, reproduced or distributed in any form or by any means, without the prior written permission of the publisher, or used beyond the limited distribution to teachers and educators permitted by McGraw-Hill for their individual course preparation. If you are a student using this Manual, you are using it without permission.

Chapter 14, Problem 78.

Redesign the circuit in Fig. 14.85 so that all resistive elements are scaled by a factor of 1,000 and all frequency-sensitive elements are frequency-scaled by a factor of 10^4.

Chapter 14, Solution 78.

$$R' = K_m R = (1000)(1) = 1\ \text{k}\Omega$$
$$L' = \frac{K_m}{K_f} L = \frac{10^3}{10^4}(1) = 0.1\ \text{H}$$
$$C' = \frac{C}{K_m K_f} = \frac{1}{(10^3)(10^4)} = 0.1\ \mu\text{F}$$

<u>The new circuit is shown below</u>.

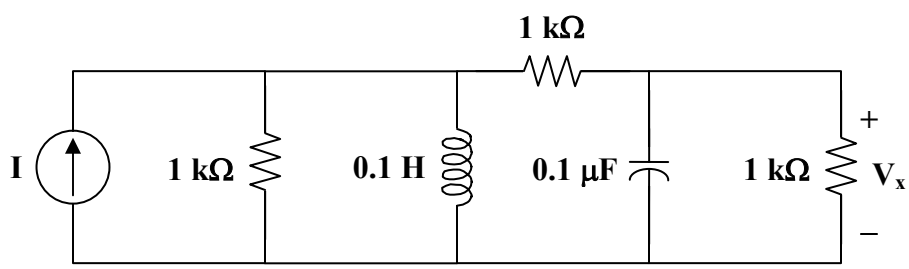

<u>PROPRIETARY MATERIAL</u>. © 2007 The McGraw-Hill Companies, Inc. All rights reserved. <u>No part of this Manual may be displayed, reproduced or distributed in any form or by any means, without the prior written permission of the publisher, or used beyond the limited distribution to teachers and educators permitted by McGraw-Hill for their individual course preparation. If you are a student using this Manual, you are using it without permission.</u>

Chapter 14, Problem 79.

* Refer to the network in Fig. 14.96.

(a) Find $\mathbf{Z}_{\text{in}}(s)$.

(b) Scale the elements by $K_m = 10$ and $K_f = 100$. Find $\mathbf{Z}_{\text{in}}(s)$ and ω_0.

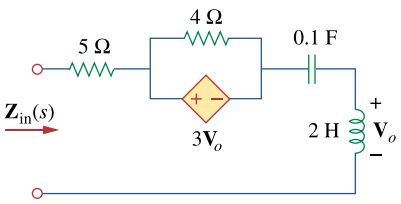

Figure 14.96
For Prob. 14.79.

* An asterisk indicates a challenging problem.

PROPRIETARY MATERIAL. © 2007 The McGraw-Hill Companies, Inc. All rights reserved. No part of this Manual may be displayed, reproduced or distributed in any form or by any means, without the prior written permission of the publisher, or used beyond the limited distribution to teachers and educators permitted by McGraw-Hill for their individual course preparation. If you are a student using this Manual, you are using it without permission.

Chapter 14, Solution 79.

(a) Insert a 1-V source at the input terminals.

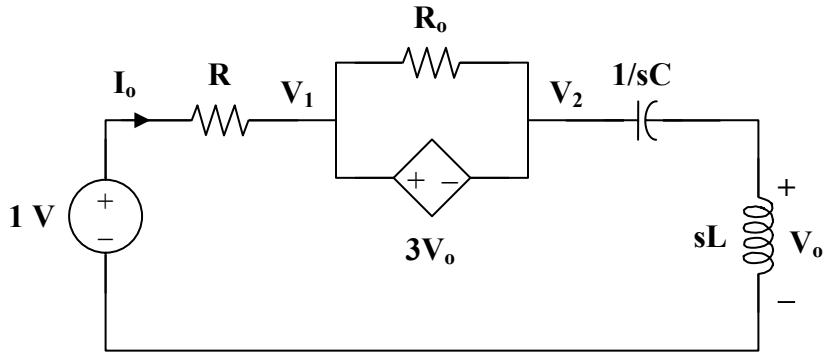

There is a supernode.

$$\frac{1-\mathbf{V}_1}{R} = \frac{\mathbf{V}_2}{sL + 1/sC} \qquad (1)$$

But $\mathbf{V}_1 = \mathbf{V}_2 + 3\mathbf{V}_o \longrightarrow \mathbf{V}_2 = \mathbf{V}_1 - 3\mathbf{V}_o$ (2)

Also, $\mathbf{V}_o = \dfrac{sL}{sL + 1/sC}\mathbf{V}_2 \longrightarrow \dfrac{\mathbf{V}_o}{sL} = \dfrac{\mathbf{V}_2}{sL + 1/sC}$ (3)

Combining (2) and (3)

$$\mathbf{V}_2 = \mathbf{V}_1 - 3\mathbf{V}_o = \frac{sL + 1/sC}{sL}\mathbf{V}_o$$

$$\mathbf{V}_o = \frac{s^2LC}{1 + 4s^2LC}\mathbf{V}_1 \qquad (4)$$

Substituting (3) and (4) into (1) gives

$$\frac{1-\mathbf{V}_1}{R} = \frac{\mathbf{V}_o}{sL} = \frac{sC}{1 + 4s^2LC}\mathbf{V}_1$$

$$1 = \mathbf{V}_1 + \frac{sRC}{1 + 4s^2LC}\mathbf{V}_1 = \frac{1 + 4s^2LC + sRC}{1 + 4s^2LC}\mathbf{V}_1$$

$$\mathbf{V}_1 = \frac{1 + 4s^2LC}{1 + 4s^2LC + sRC}$$

$$\mathbf{I}_o = \frac{1-\mathbf{V}_1}{R} = \frac{sRC}{R\,(1 + 4s^2LC + sRC)}$$

$$\mathbf{Z}_{in} = \frac{1}{\mathbf{I}_o} = \frac{1 + sRC + 4s^2LC}{sC}$$

$$\mathbf{Z}_{in} = 4sL + R + \frac{1}{sC} \qquad (5)$$

PROPRIETARY MATERIAL. © 2007 The McGraw-Hill Companies, Inc. All rights reserved. No part of this Manual may be displayed, reproduced or distributed in any form or by any means, without the prior written permission of the publisher, or used beyond the limited distribution to teachers and educators permitted by McGraw-Hill for their individual course preparation. If you are a student using this Manual, you are using it without permission.

When $R = 5$, $L = 2$, $C = 0.1$,

$$\mathbf{Z}_{in}(s) = \underline{\mathbf{8s + 5 + \frac{10}{s}}}$$

At resonance,

$$\text{Im}(\mathbf{Z}_{in}) = 0 = 4\omega L - \frac{1}{\omega C}$$

or $$\omega_0 = \frac{1}{2\sqrt{LC}} = \frac{1}{2\sqrt{(0.1)(2)}} = \underline{\mathbf{1.118\ rad/s}}$$

(b) After scaling,

$$R' \longrightarrow K_m R$$
$$4\,\Omega \longrightarrow 40\,\Omega$$
$$5\,\Omega \longrightarrow 50\,\Omega$$

$$L' = \frac{K_m}{K_f} L = \frac{10}{100}(2) = 0.2\text{ H}$$

$$C' = \frac{C}{K_m K_f} = \frac{0.1}{(10)(100)} = 10^{-4}$$

From (5),

$$\mathbf{Z}_{in}(s) = \underline{\mathbf{0.8s + 50 + \frac{10^4}{s}}}$$

$$\omega_0 = \frac{1}{2\sqrt{LC}} = \frac{1}{2\sqrt{(0.2)(10^{-4})}} = \underline{\mathbf{111.8\ rad/s}}$$

PROPRIETARY MATERIAL. © 2007 The McGraw-Hill Companies, Inc. All rights reserved. No part of this Manual may be displayed, reproduced or distributed in any form or by any means, without the prior written permission of the publisher, or used beyond the limited distribution to teachers and educators permitted by McGraw-Hill for their individual course preparation. If you are a student using this Manual, you are using it without permission.

Chapter 14, Problem 80.

(a) For the circuit in Fig. 14.97, draw the new circuit after it has been scaled by K_m = 200 and K_f = 10^4.

(b) Obtain the Thevenin equivalent impedance at terminals *a-b* of the scaled circuit at ω = 10^4 rad/s.

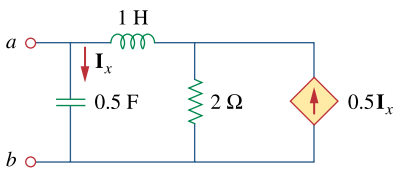

Figure 14.97
For Prob. 14.80.

Chapter 14, Solution 80.

(a) $R' = K_m R = (200)(2) = 400\ \Omega$

$$L' = \frac{K_m L}{K_f} = \frac{(200)(1)}{10^4} = 20\text{ mH}$$

$$C' = \frac{C}{K_m K_f} = \frac{0.5}{(200)(10^4)} = 0.25\ \mu\text{F}$$

<u>The new circuit is shown below</u>.

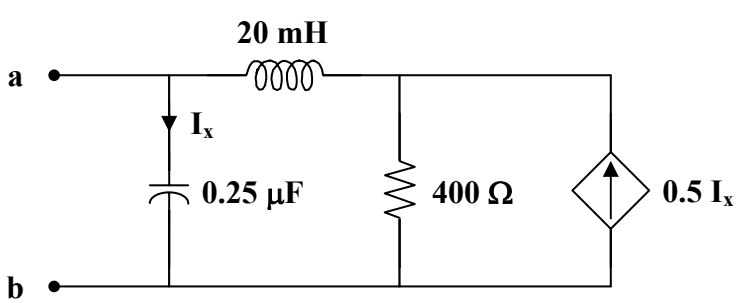

<u>PROPRIETARY MATERIAL</u>. © 2007 The McGraw-Hill Companies, Inc. All rights reserved. <u>No part of this Manual may be displayed, reproduced or distributed in any form or by any means, without the prior written permission of the publisher, or used beyond the limited distribution to teachers and educators permitted by McGraw-Hill for their individual course preparation. If you are a student using this Manual, you are using it without permission.</u>

(b) Insert a 1-A source at the terminals a-b.

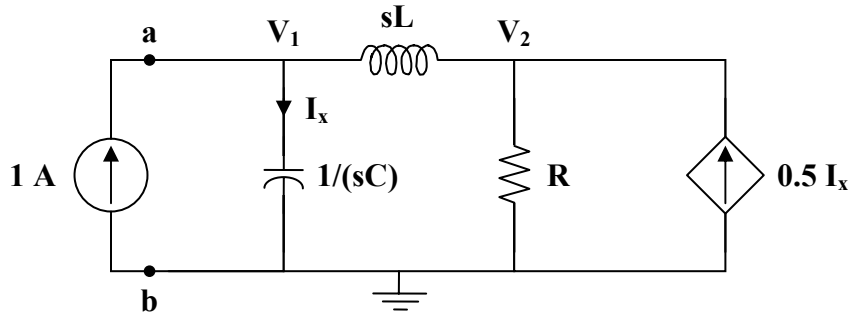

At node 1,

$$1 = sC\mathbf{V}_1 + \frac{\mathbf{V}_1 - \mathbf{V}_2}{sL} \qquad (1)$$

At node 2,

$$\frac{\mathbf{V}_1 - \mathbf{V}_2}{sL} + 0.5\mathbf{I}_x = \frac{\mathbf{V}_2}{R}$$

But, $\mathbf{I}_x = sC\mathbf{V}_1$.

$$\frac{\mathbf{V}_1 - \mathbf{V}_2}{sL} + 0.5sC\mathbf{V}_1 = \frac{\mathbf{V}_2}{R} \qquad (2)$$

Solving (1) and (2),

$$\mathbf{V}_1 = \frac{sL + R}{s^2LC + 0.5sCR + 1}$$

$$\mathbf{Z}_{Th} = \frac{\mathbf{V}_1}{1} = \frac{sL + R}{s^2LC + 0.5sCR + 1}$$

At $\omega = 10^4$,

$$\mathbf{Z}_{Th} = \frac{(j10^4)(20\times10^{-3}) + 400}{(j10^4)^2(20\times10^{-3})(0.25\times10^{-6}) + 0.5(j10^4)(0.25\times10^{-6})(400) + 1}$$

$$\mathbf{Z}_{Th} = \frac{400 + j200}{0.5 + j0.5} = 600 - j200$$

$$\mathbf{Z}_{Th} = \underline{\mathbf{632.5\angle -18.435^\circ\ ohms}}$$

PROPRIETARY MATERIAL. © 2007 The McGraw-Hill Companies, Inc. All rights reserved. No part of this Manual may be displayed, reproduced or distributed in any form or by any means, without the prior written permission of the publisher, or used beyond the limited distribution to teachers and educators permitted by McGraw-Hill for their individual course preparation. If you are a student using this Manual, you are using it without permission.

Chapter 14, Problem 81.

The circuit shown in Fig. 14.98 has the impedance

$$Z(s) = \frac{1{,}000(s+1)}{(s+1+j50)(s+1-j50)}, \qquad s = j\omega$$

Find:

(a) the values of R, L, C, and G

(b) the element values that will raise the resonant frequency by a factor of 10^3 by frequency scaling

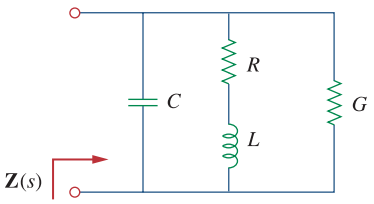

Figure 14.98
For Prob. 14.81.

PROPRIETARY MATERIAL. © 2007 The McGraw-Hill Companies, Inc. All rights reserved. No part of this Manual may be displayed, reproduced or distributed in any form or by any means, without the prior written permission of the publisher, or used beyond the limited distribution to teachers and educators permitted by McGraw-Hill for their individual course preparation. If you are a student using this Manual, you are using it without permission.

Chapter 14, Solution 81.

(a)

$$\frac{1}{Z} = G + j\omega C + \frac{1}{R + j\omega L} = \frac{(G + j\omega C)(R + j\omega L) + 1}{R + j\omega L}$$

$$\text{which leads to} \qquad Z = \frac{j\omega L + R}{-\omega^2 LC + j\omega(RC + LG) + GR + 1}$$

$$Z(\omega) = \frac{j\dfrac{\omega}{C} + \dfrac{R}{LC}}{-\omega^2 + j\omega\left(\dfrac{R}{L} + \dfrac{G}{C}\right) + \dfrac{GR + 1}{LC}} \qquad (1)$$

We compare this with the given impedance:

$$Z(\omega) = \frac{1000(j\omega + 1)}{-\omega^2 + 2j\omega + 1 + 2500} \qquad (2)$$

Comparing (1) and (2) shows that

$$\frac{1}{C} = 1000 \quad \longrightarrow \quad C = 1\,\text{mF}, \quad R/L = 1 \quad \longrightarrow \quad R = L$$

$$\frac{R}{L} + \frac{G}{C} = 2 \quad \longrightarrow \quad G = C = 1\ \text{mS}$$

$$2501 = \frac{GR + 1}{LC} = \frac{10^{-3}R + 1}{10^{-3}R} \quad \longrightarrow \quad R = 0.4 = L$$

Thus,

R = **<u>0.4Ω</u>**, L = **<u>0.4 H</u>**, C = **<u>1 mF</u>**, G = **<u>1 mS</u>**

(b) By frequency-scaling, $K_f = 1000$.

R' = **<u>0.4 Ω</u>**, G' = **<u>1 mS</u>**

$$L' = \frac{L}{K_f} = \frac{0.4}{10^3} = \underline{0.4\text{mH}}, \qquad C' = \frac{C}{K_f} = \frac{10^{-3}}{10^{-3}} = \underline{1\mu\text{F}}$$

<u>PROPRIETARY MATERIAL</u>. © 2007 The McGraw-Hill Companies, Inc. All rights reserved. <u>No part of this Manual may be displayed, reproduced or distributed in any form or by any means, without the prior written permission of the publisher, or used beyond the limited distribution to teachers and educators permitted by McGraw-Hill for their individual course preparation. If you are a student using this Manual, you are using it without permission.</u>

Chapter 14, Problem 82.

Scale the lowpass active filter in Fig. 14.99 so that its corner frequency increases from 1 rad/s to 200 rad/s. Use a 1-μF capacitor.

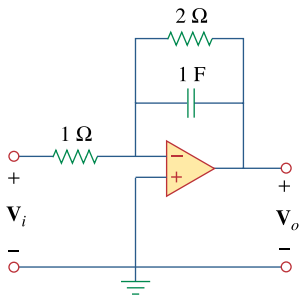

Figure 14.99
For Prob. 14.82.

Chapter 14, Solution 82.

$$C' = \frac{C}{K_m K_f}$$

$$K_f = \frac{\omega'_c}{\omega} = \frac{200}{1} = 200$$

$$K_m = \frac{C}{C'} \cdot \frac{1}{K_f} = \frac{1}{10^{-6}} \cdot \frac{1}{200} = 5000$$

$R' = K_m R = \underline{\mathbf{5\ k\Omega}}$, thus, $R'_f = 2R_i = \underline{\mathbf{10\ k\Omega}}$

PROPRIETARY MATERIAL. © 2007 The McGraw-Hill Companies, Inc. All rights reserved. No part of this Manual may be displayed, reproduced or distributed in any form or by any means, without the prior written permission of the publisher, or used beyond the limited distribution to teachers and educators permitted by McGraw-Hill for their individual course preparation. If you are a student using this Manual, you are using it without permission.

Chapter 14, Problem 83.

The op amp circuit in Fig. 14.100 is to be magnitude-scaled by 100 and frequency-scaled by 10^5. Find the resulting element values.

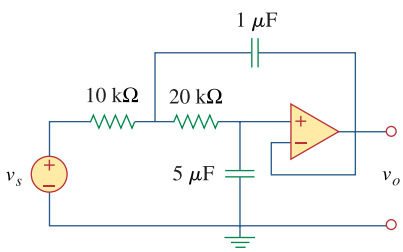

Figure 14.100
For Prob. 14.83.

Chapter 14, Solution 83.

$$1\mu F \longrightarrow C' = \frac{1}{K_m K_f} C = \frac{10^{-6}}{100x10^5} = \underline{0.1\,pF}$$

$$5\mu F \longrightarrow C' = \underline{0.5\,pF}$$

$$10\,k\Omega \longrightarrow R' = K_m R = 100x10\,k\Omega = \underline{1\,M\Omega}$$

$$20\,k\Omega \longrightarrow R' = \underline{2\,M\Omega}$$

PROPRIETARY MATERIAL. © 2007 The McGraw-Hill Companies, Inc. All rights reserved. No part of this Manual may be displayed, reproduced or distributed in any form or by any means, without the prior written permission of the publisher, or used beyond the limited distribution to teachers and educators permitted by McGraw-Hill for their individual course preparation. If you are a student using this Manual, you are using it without permission.

Chapter 14, Problem 84.

Using *PSpice*, obtain the frequency response of the circuit in Fig. 14.101 on the next page.

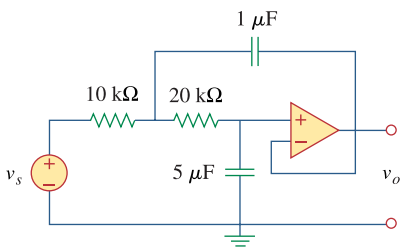

Figure 14.101
For Prob. 14.84.

Chapter 14, Solution 84.

The schematic is shown below. A voltage marker is inserted to measure v_o. In the AC sweep box, we select Total Points = 50, Start Frequency = 1, and End Frequency = 1000. After saving and simulation, we obtain the magnitude and phase plots in the probe menu as shown below.

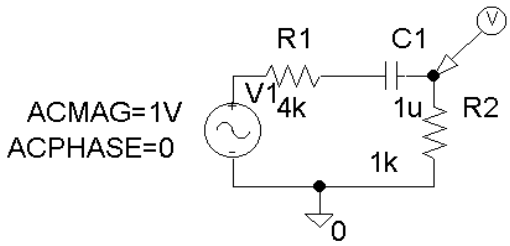

PROPRIETARY MATERIAL. © 2007 The McGraw-Hill Companies, Inc. All rights reserved. No part of this Manual may be displayed, reproduced or distributed in any form or by any means, without the prior written permission of the publisher, or used beyond the limited distribution to teachers and educators permitted by McGraw-Hill for their individual course preparation. If you are a student using this Manual, you are using it without permission.

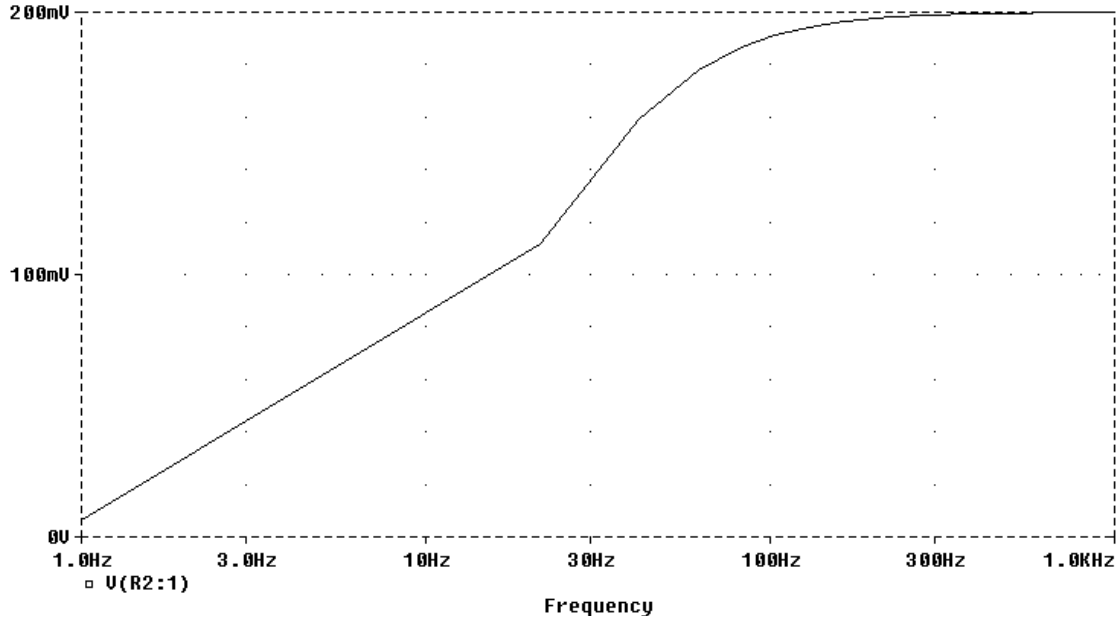

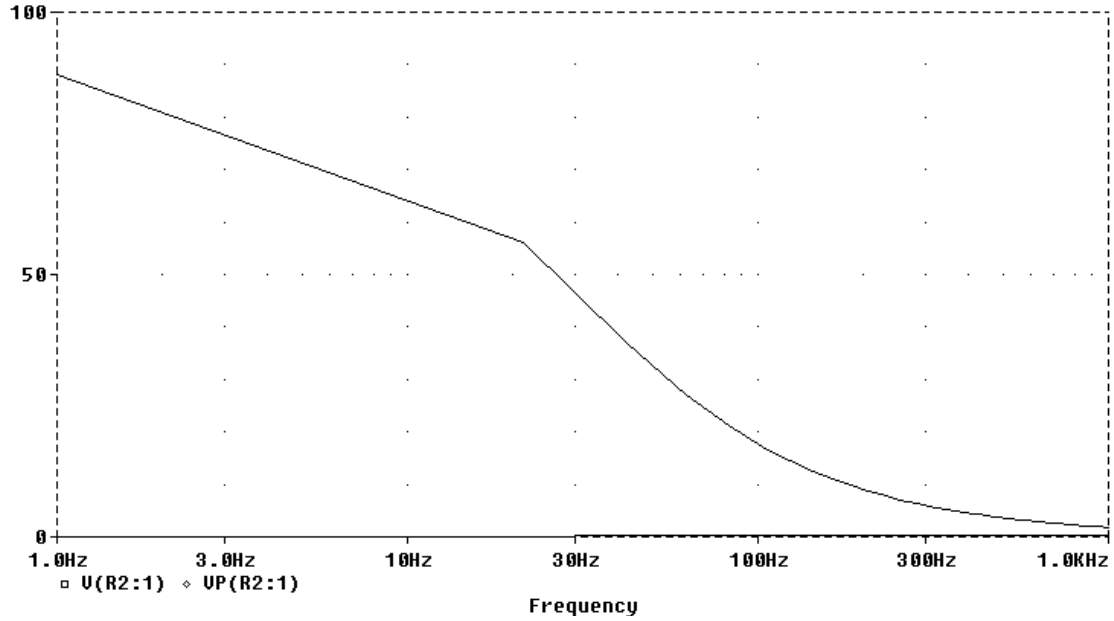

PROPRIETARY MATERIAL. © 2007 The McGraw-Hill Companies, Inc. All rights reserved. No part of this Manual may be displayed, reproduced or distributed in any form or by any means, without the prior written permission of the publisher, or used beyond the limited distribution to teachers and educators permitted by McGraw-Hill for their individual course preparation. If you are a student using this Manual, you are using it without permission.

Chapter 14, Problem 85.

Use *PSpice* to obtain the magnitude and phase plots of $\mathbf{V}_0/\mathbf{I}_s$ of the circuit in Fig. 14.102.

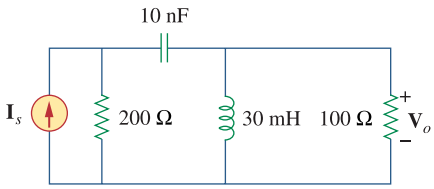

Figure 14.102
For Prob. 14.85.

Chapter 14, Solution 85.

We let $I_s = 1\angle 0^o$ A so that $V_o / I_s = V_o$. The schematic is shown below. The circuit is simulated for 100 < f < 10 kHz.

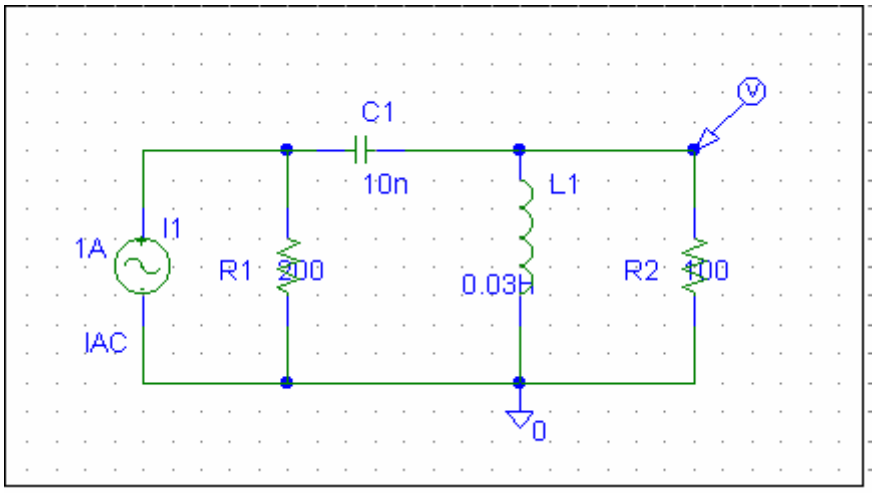

PROPRIETARY MATERIAL. © 2007 The McGraw-Hill Companies, Inc. All rights reserved. No part of this Manual may be displayed, reproduced or distributed in any form or by any means, without the prior written permission of the publisher, or used beyond the limited distribution to teachers and educators permitted by McGraw-Hill for their individual course preparation. If you are a student using this Manual, you are using it without permission.

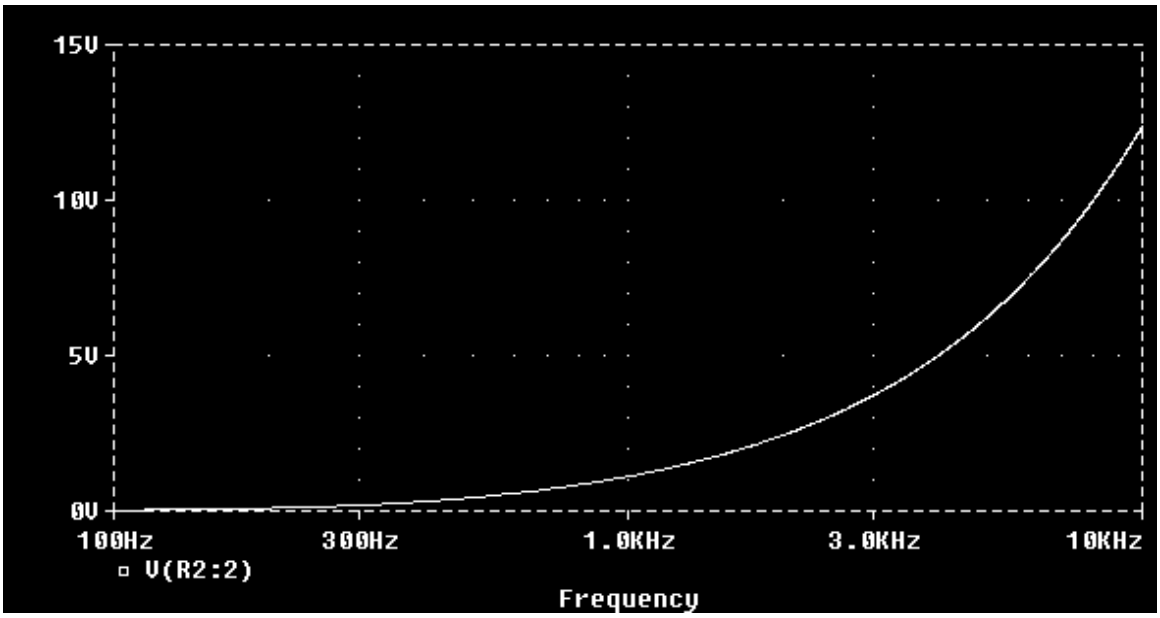

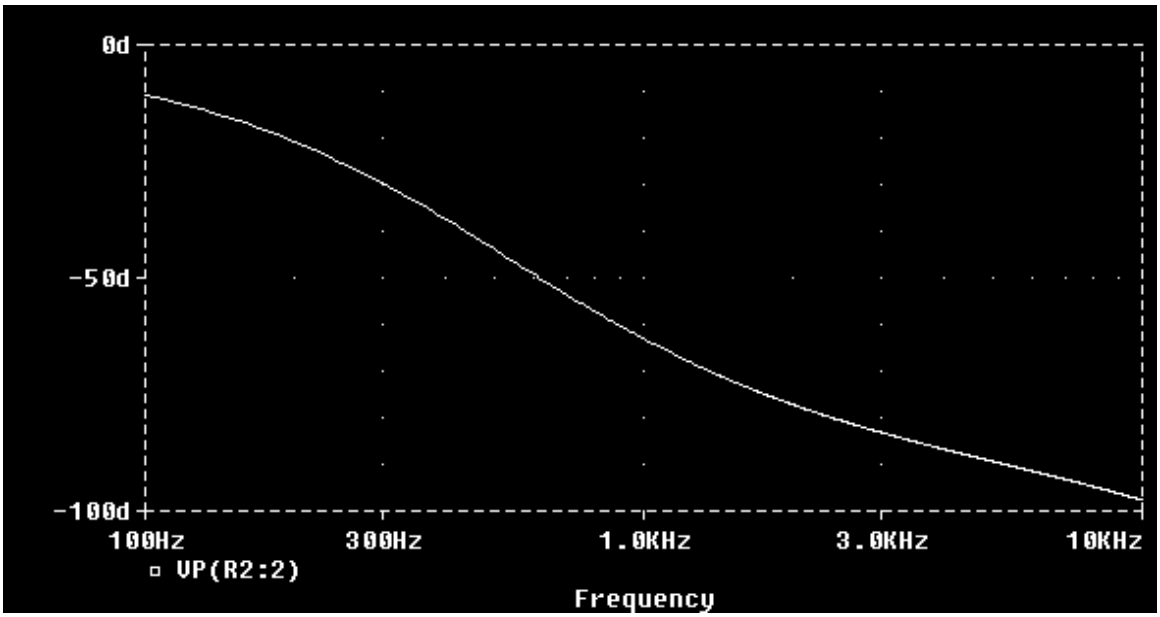

PROPRIETARY MATERIAL. © 2007 The McGraw-Hill Companies, Inc. All rights reserved. No part of this Manual may be displayed, reproduced or distributed in any form or by any means, without the prior written permission of the publisher, or used beyond the limited distribution to teachers and educators permitted by McGraw-Hill for their individual course preparation. If you are a student using this Manual, you are using it without permission.

Chapter 14, Problem 86.

Use *PSpice* to provide the frequency response (magnitude and phase of *i*) of the circuit in Fig. 14.103. Use linear frequency sweep from 1 to 10,000 Hz.

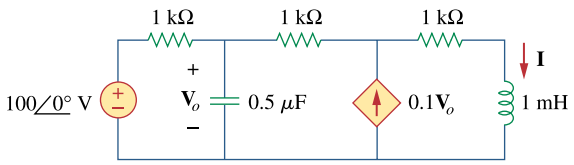

Figure 14.103
For Prob. 14.86.

Chapter 14, Solution 86.

The schematic is shown below. A current marker is inserted to measure **I**. We set Total Points = 101, start Frequency = 1, and End Frequency = 10 kHz in the AC sweep box. After simulation, the magnitude and phase plots are obtained in the Probe menu as shown below.

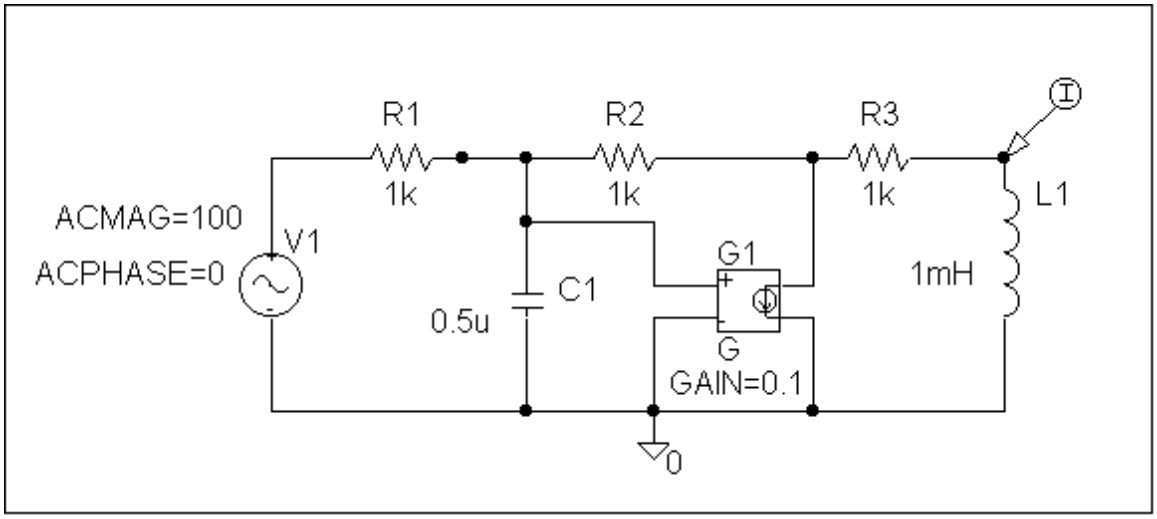

PROPRIETARY MATERIAL. © 2007 The McGraw-Hill Companies, Inc. All rights reserved. No part of this Manual may be displayed, reproduced or distributed in any form or by any means, without the prior written permission of the publisher, or used beyond the limited distribution to teachers and educators permitted by McGraw-Hill for their individual course preparation. If you are a student using this Manual, you are using it without permission.

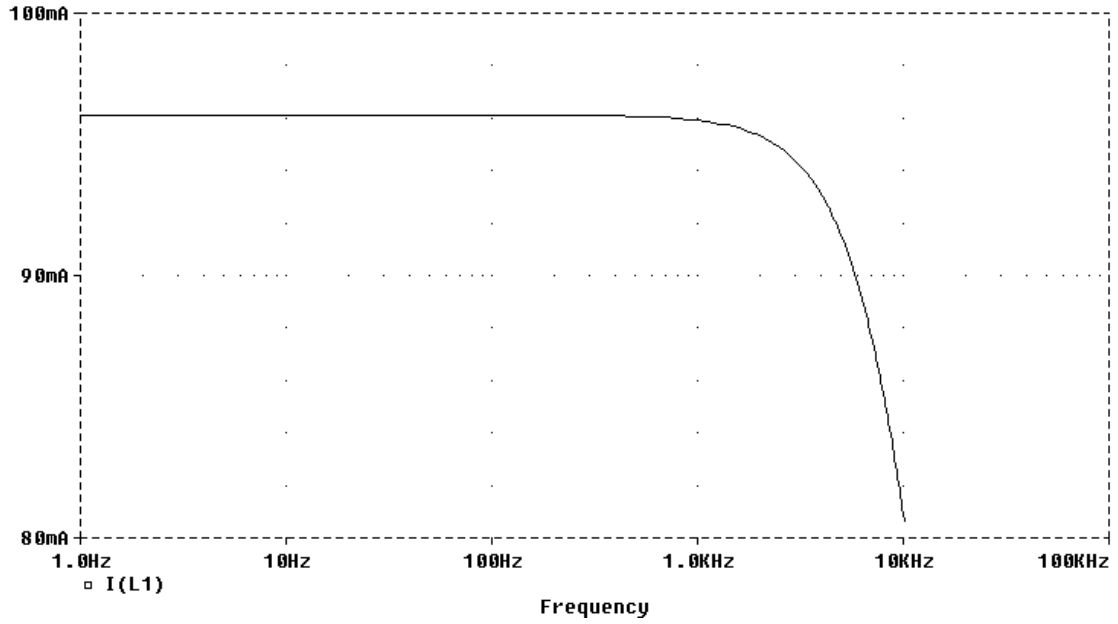

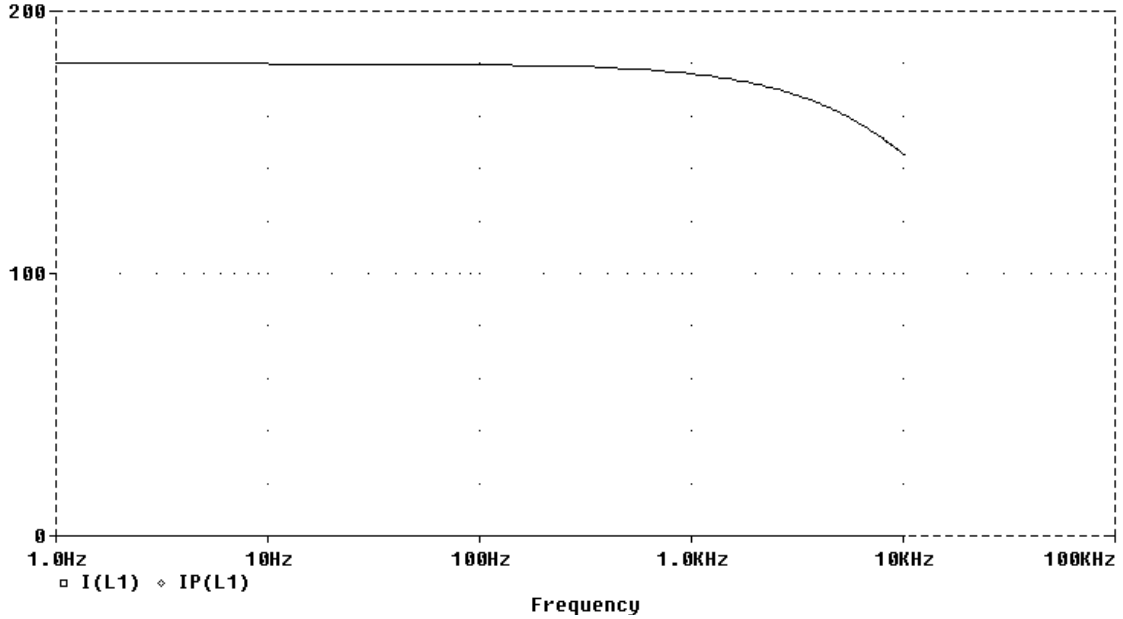

PROPRIETARY MATERIAL. © 2007 The McGraw-Hill Companies, Inc. All rights reserved. No part of this Manual may be displayed, reproduced or distributed in any form or by any means, without the prior written permission of the publisher, or used beyond the limited distribution to teachers and educators permitted by McGraw-Hill for their individual course preparation. If you are a student using this Manual, you are using it without permission.

Chapter 14, Problem 87.

In the interval $0.1 < f < 100$ Hz, plot the response of the network in Fig. 14.104. Classify this filter and obtain ω_0.

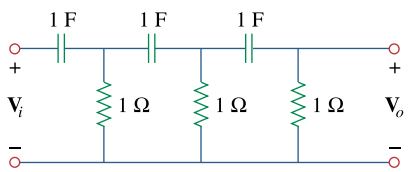

Figure 14.104
For Prob. 14.87.

PROPRIETARY MATERIAL. © 2007 The McGraw-Hill Companies, Inc. All rights reserved. No part of this Manual may be displayed, reproduced or distributed in any form or by any means, without the prior written permission of the publisher, or used beyond the limited distribution to teachers and educators permitted by McGraw-Hill for their individual course preparation. If you are a student using this Manual, you are using it without permission.

Chapter 14, Solution 87.

The schematic is shown below. In the AC Sweep box, we set Total Points = 50, Start Frequency = 1, and End Frequency = 100. After simulation, we obtain the magnitude response as shown below. It is evident from the response that the circuit represents a high-pass filter.

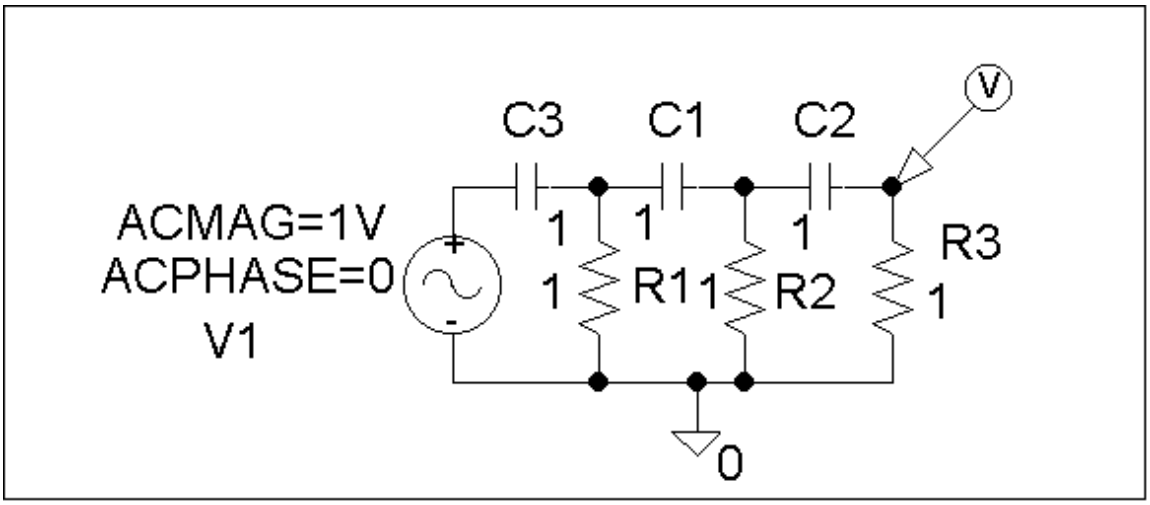

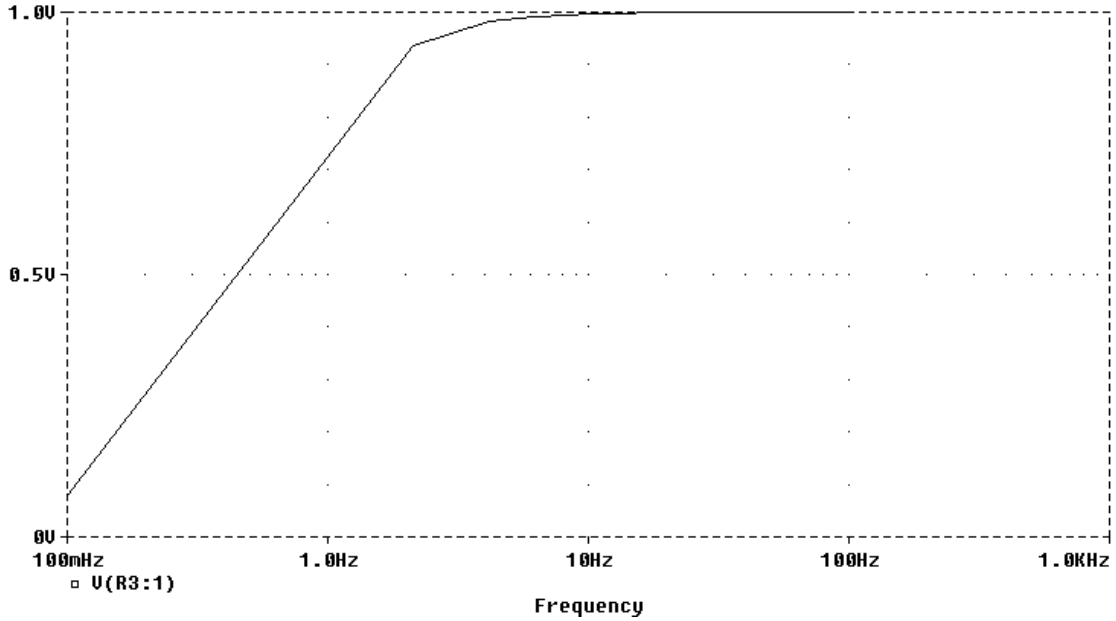

PROPRIETARY MATERIAL. © 2007 The McGraw-Hill Companies, Inc. All rights reserved. No part of this Manual may be displayed, reproduced or distributed in any form or by any means, without the prior written permission of the publisher, or used beyond the limited distribution to teachers and educators permitted by McGraw-Hill for their individual course preparation. If you are a student using this Manual, you are using it without permission.

Chapter 14, Problem 88.

Use *PSpice* to generate the magnitude and phase Bode plots of $\mathbf{V}_0$ in the circuit of Fig. 14.105.

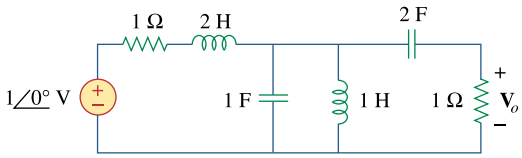

Figure 14.105
For Prob. 14.88.

Chapter 14, Solution 88.

The schematic is shown below. We insert a voltage marker to measure V_o. In the AC Sweep box, we set Total Points = 101, Start Frequency = 1, and End Frequency = 100. After simulation, we obtain the magnitude and phase plots of V_o as shown below.

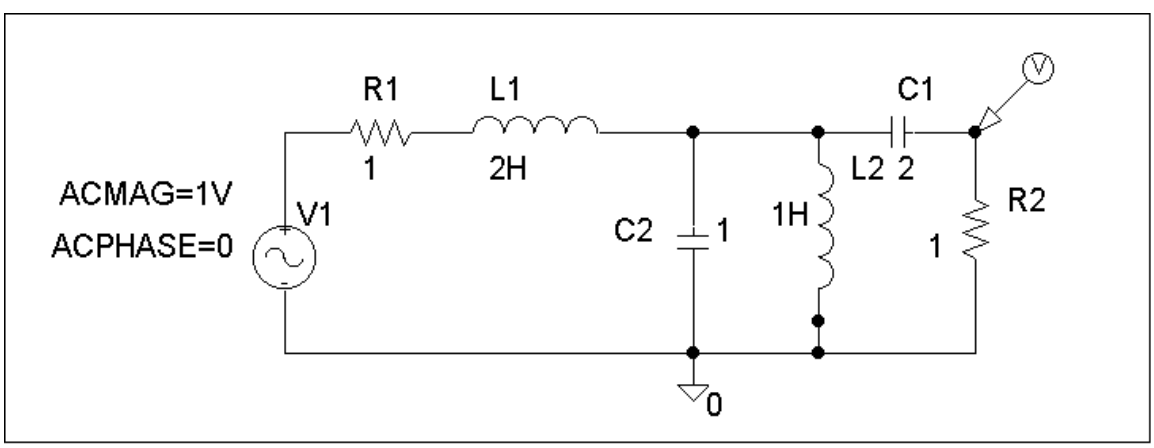

PROPRIETARY MATERIAL. © 2007 The McGraw-Hill Companies, Inc. All rights reserved. No part of this Manual may be displayed, reproduced or distributed in any form or by any means, without the prior written permission of the publisher, or used beyond the limited distribution to teachers and educators permitted by McGraw-Hill for their individual course preparation. If you are a student using this Manual, you are using it without permission.

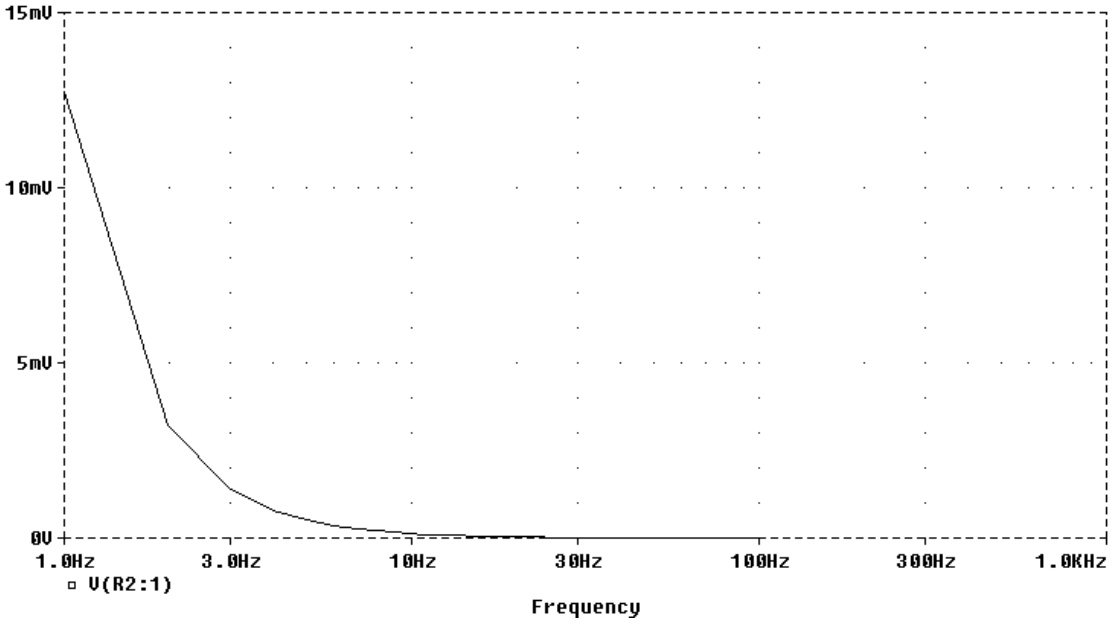

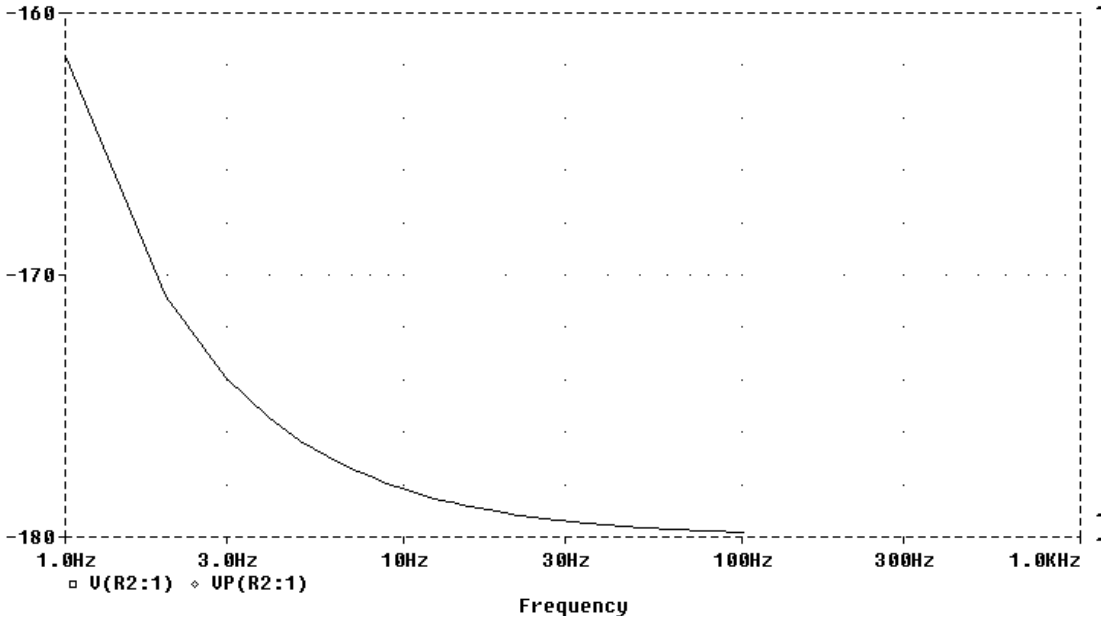

PROPRIETARY MATERIAL. © 2007 The McGraw-Hill Companies, Inc. All rights reserved. No part of this Manual may be displayed, reproduced or distributed in any form or by any means, without the prior written permission of the publisher, or used beyond the limited distribution to teachers and educators permitted by McGraw-Hill for their individual course preparation. If you are a student using this Manual, you are using it without permission.

Chapter 14, Problem 89.

Obtain the magnitude plot of the response $\mathbf{V}_0$ in the network of Fig. 14.106 for the frequency interval $100 < f < 1{,}000$ Hz..

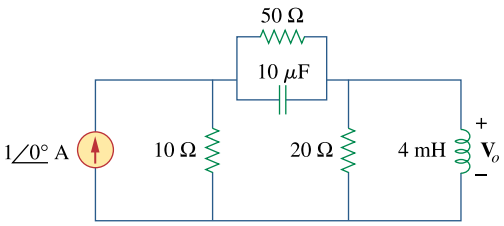

Figure 14.106
For Prob. 14.89.

PROPRIETARY MATERIAL. © 2007 The McGraw-Hill Companies, Inc. All rights reserved. No part of this Manual may be displayed, reproduced or distributed in any form or by any means, without the prior written permission of the publisher, or used beyond the limited distribution to teachers and educators permitted by McGraw-Hill for their individual course preparation. If you are a student using this Manual, you are using it without permission.

Chapter 14, Solution 89.

The schematic is shown below. In the AC Sweep box, we type Total Points = 101, Start Frequency = 100, and End Frequency = 1 k. After simulation, the magnitude plot of the response V_o is obtained as shown below.

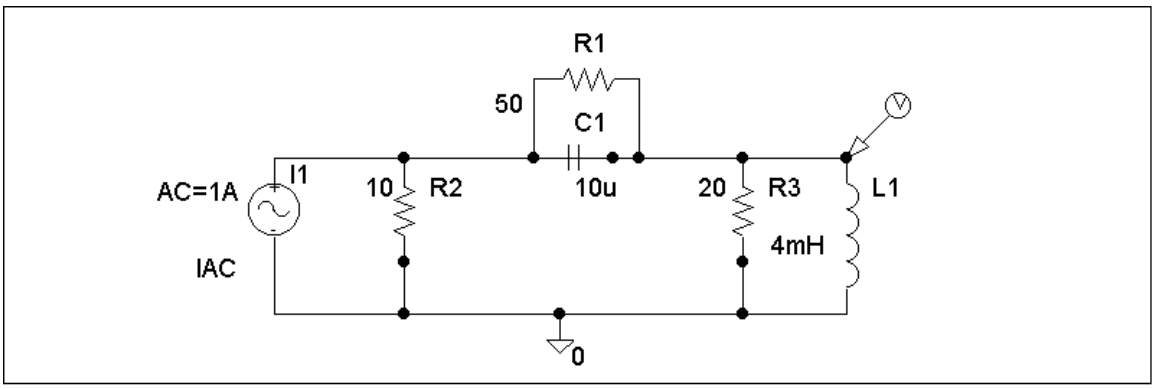

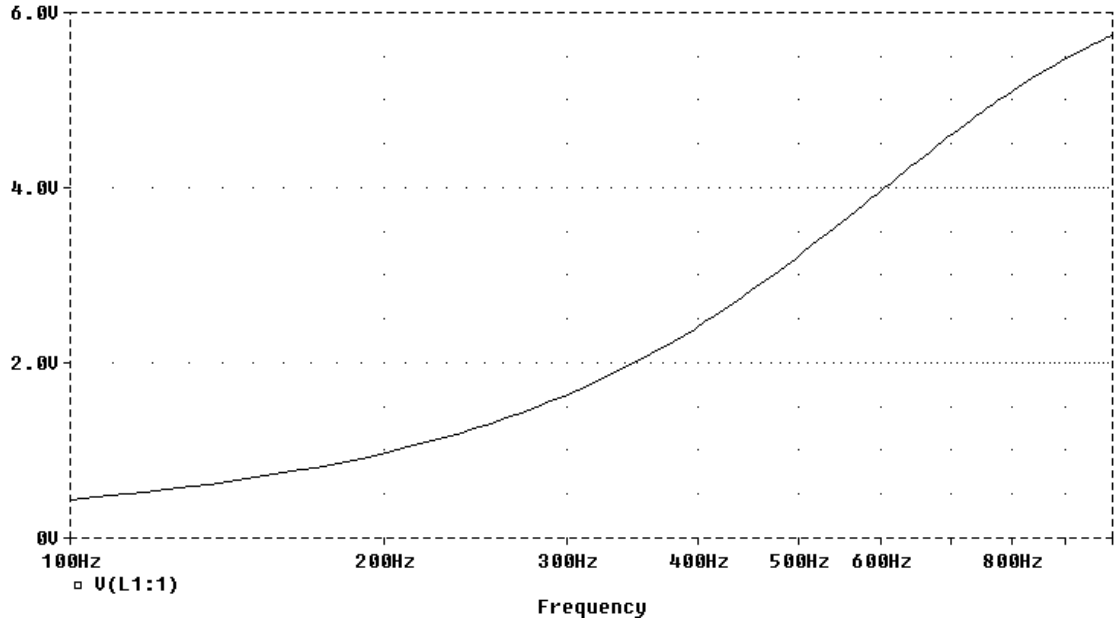

PROPRIETARY MATERIAL. © 2007 The McGraw-Hill Companies, Inc. All rights reserved. No part of this Manual may be displayed, reproduced or distributed in any form or by any means, without the prior written permission of the publisher, or used beyond the limited distribution to teachers and educators permitted by McGraw-Hill for their individual course preparation. If you are a student using this Manual, you are using it without permission.

Chapter 14, Problem 90.

Obtain the frequency response of the circuit in Fig. 14.40 (see Practice Problem 14.10). Take $R_1 = R_2 = 100\,\Omega$, L =2 mH. Use $1 < f < 100{,}000$ Hz.

Chapter 14, Solution 90.

The schematic is shown below. In the AC Sweep box, we set Total Points = 1001, Start Frequency = 1, and End Frequency = 100k. After simulation, we obtain the magnitude plot of the response as shown below. The response shows that the circuit is a high-pass filter.

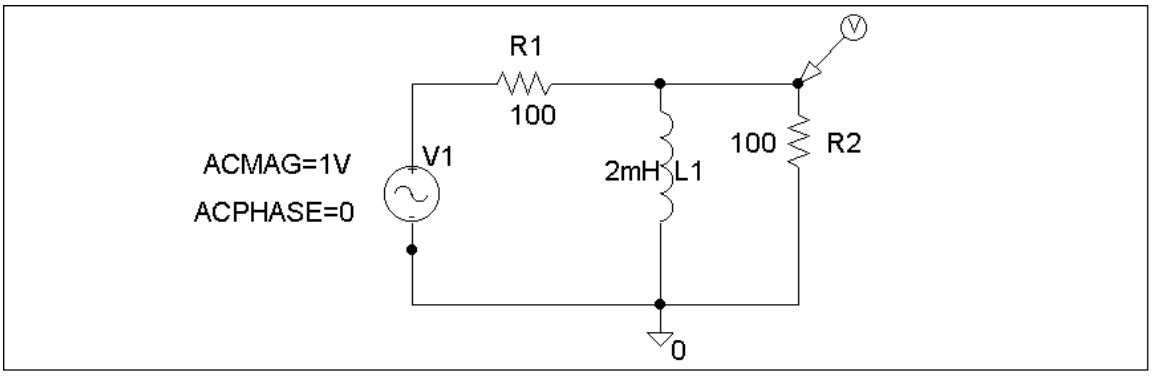

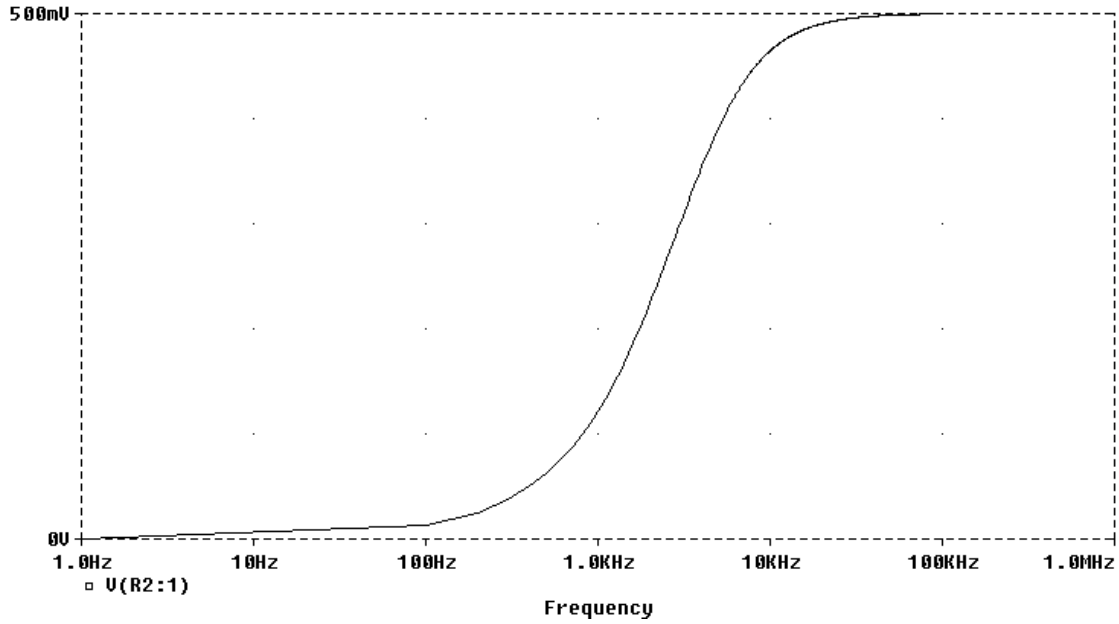

PROPRIETARY MATERIAL. © 2007 The McGraw-Hill Companies, Inc. All rights reserved. No part of this Manual may be displayed, reproduced or distributed in any form or by any means, without the prior written permission of the publisher, or used beyond the limited distribution to teachers and educators permitted by McGraw-Hill for their individual course preparation. If you are a student using this Manual, you are using it without permission.

Chapter 14, Problem 91.

For the "tank" circuit of Fig. 14.79, obtain the frequency response (voltage across the capacitor) using *PSpice*. Determine the resonant frequency of the circuit.

Chapter 14, Solution 91.

The schematic is shown below. In the AC Sweep box, we select Total Points = 101, Start Frequency = 10, and End Frequency = 10 k. After simulation, the magnitude plot of the frequency response is obtained. From the plot, we obtain the resonant frequency f_o is approximately equal to 800 Hz so that

$\omega_o = 2\pi f_o =$ **5026 rad/s**.

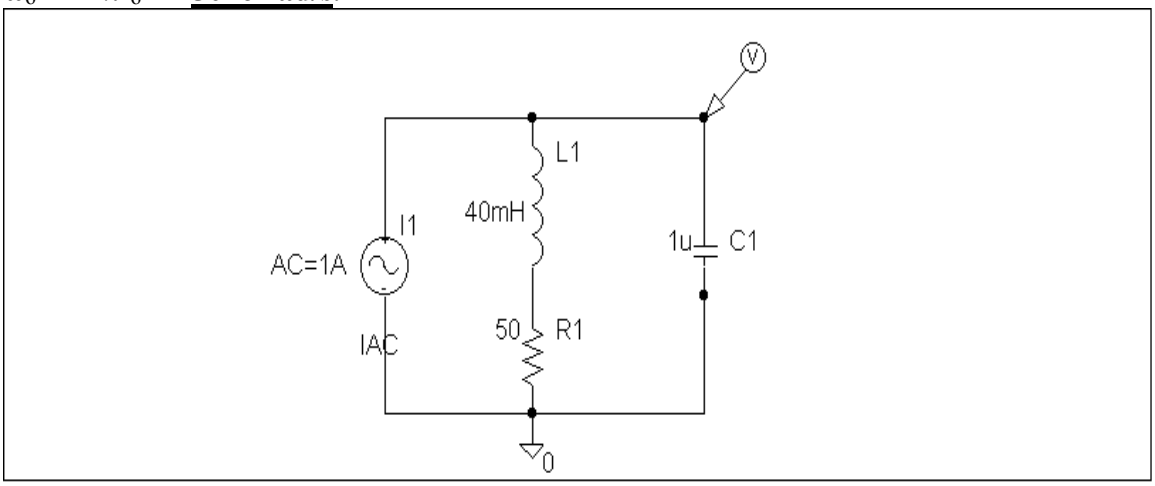

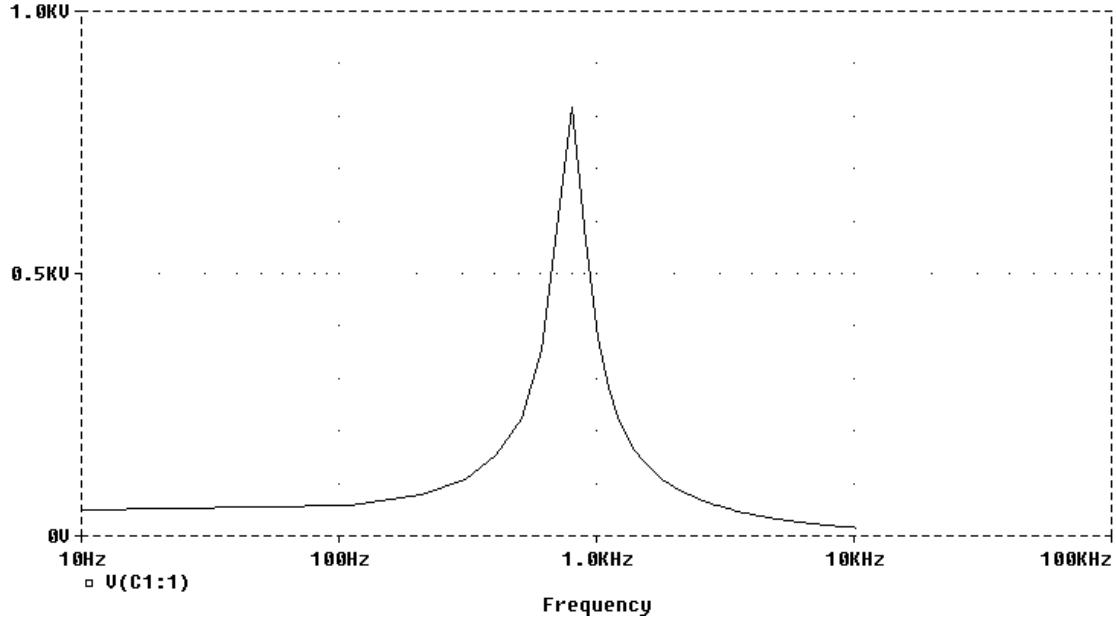

PROPRIETARY MATERIAL. © 2007 The McGraw-Hill Companies, Inc. All rights reserved. No part of this Manual may be displayed, reproduced or distributed in any form or by any means, without the prior written permission of the publisher, or used beyond the limited distribution to teachers and educators permitted by McGraw-Hill for their individual course preparation. If you are a student using this Manual, you are using it without permission.

Chapter 14, Problem 92.

Using *PSpice*, plot the magnitude of the frequency response of the circuit in Fig. 14.85.

Chapter 14, Solution 92.

The schematic is shown below. We type Total Points = 101, Start Frequency = 1, and End Frequency = 100 in the AC Sweep box. After simulating the circuit, the magnitude plot of the frequency response is shown below.

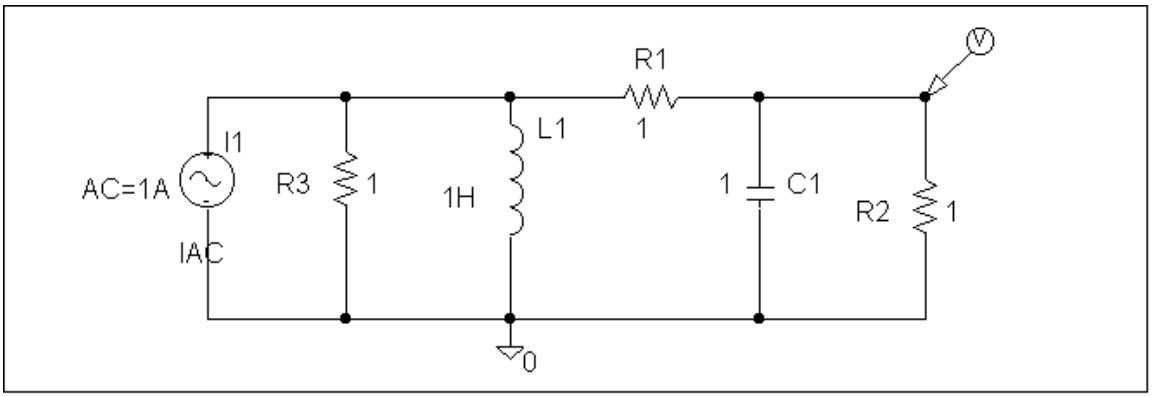

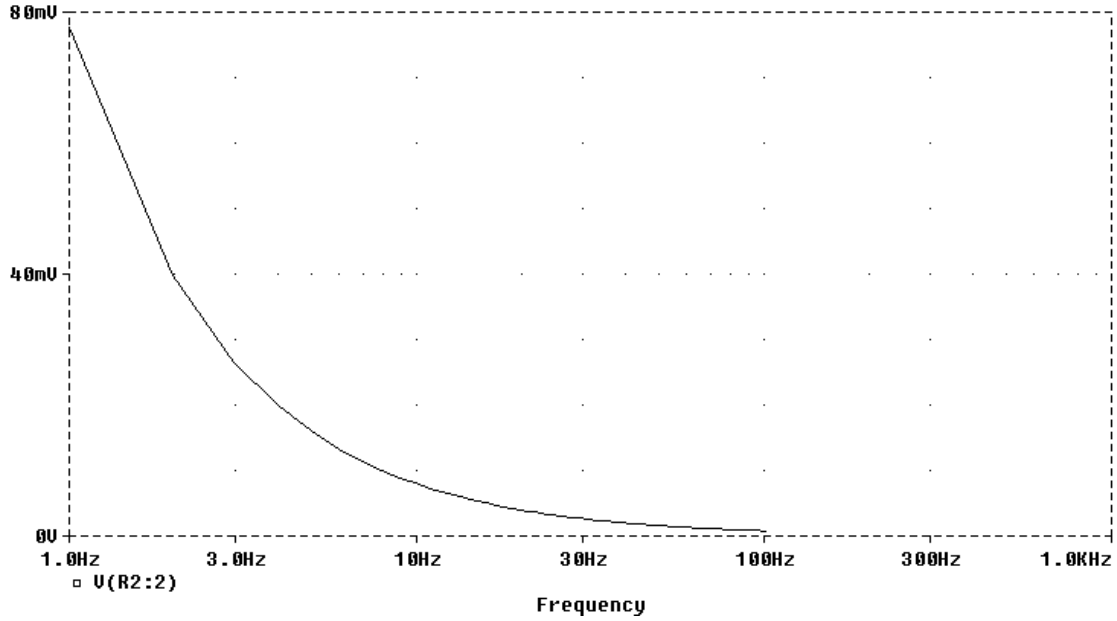

PROPRIETARY MATERIAL. © 2007 The McGraw-Hill Companies, Inc. All rights reserved. No part of this Manual may be displayed, reproduced or distributed in any form or by any means, without the prior written permission of the publisher, or used beyond the limited distribution to teachers and educators permitted by McGraw-Hill for their individual course preparation. If you are a student using this Manual, you are using it without permission.

Chapter 14, Problem 93.

For the phase shifter circuit shown in Fig. 14.107, find $H = V_o/V_s$.

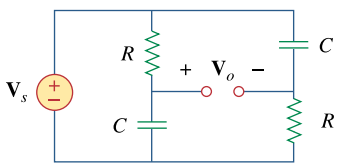

Figure 14.107
For Prob. 14.93.

Chapter 14, Solution 93.

Consider the circuit as shown below.

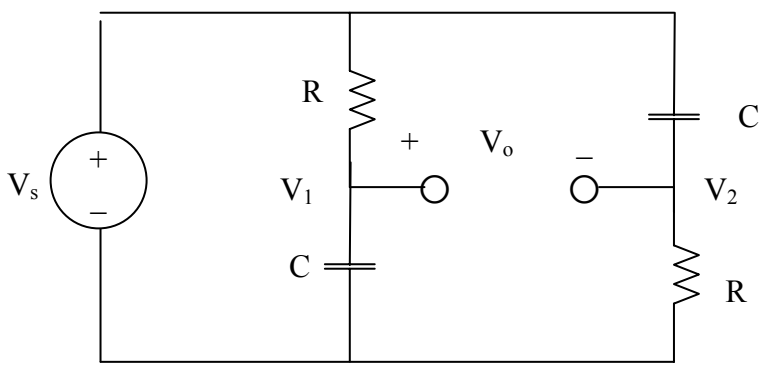

$$V_1 = \frac{\frac{1}{sC}}{R + \frac{1}{sC}} V_s = \frac{V}{1 + sRC}$$

$$V_2 = \frac{R}{R + sC} V_s = \frac{sRC}{1 + sRC} V_s$$

$$V_o = V_1 - V_2 = \frac{1 - sRC}{1 + sRC} V_s$$

Hence,

$$H(s) = \frac{V_o}{V_s} = \underline{\frac{1 - sRC}{1 + sRC}}$$

PROPRIETARY MATERIAL. © 2007 The McGraw-Hill Companies, Inc. All rights reserved. No part of this Manual may be displayed, reproduced or distributed in any form or by any means, without the prior written permission of the publisher, or used beyond the limited distribution to teachers and educators permitted by McGraw-Hill for their individual course preparation. If you are a student using this Manual, you are using it without permission.

Chapter 14, Problem 94.

For an emergency situation, an engineer needs to make an *RC* highpass filter. He has one 10-pF capacitor, one 30-pF capacitor, one 1.8-$k\Omega$ resistor, and one 3.3-$k\Omega$ resistor available. Find the greatest cutoff frequency possible using these elements.

Chapter 14, Solution 94.

$$\omega_c = \frac{1}{RC}$$

We make R and C as small as possible. To achieve this, we connect 1.8 kΩ and 3.3 kΩ in parallel so that

$$R = \frac{1.8x3.3}{1.8+3.3} = 1.164\,k\Omega$$

We place the 10-pF and 30-pF capacitors in series so that

$$C = (10x30)/40 = 7.5\text{ pF}$$

Hence,

$$\omega_c = \frac{1}{RC} = \frac{1}{1.164x10^3 x7.5x10^{-12}} = \underline{114.55x10^6\text{ rad/s}}$$

PROPRIETARY MATERIAL. © 2007 The McGraw-Hill Companies, Inc. All rights reserved. No part of this Manual may be displayed, reproduced or distributed in any form or by any means, without the prior written permission of the publisher, or used beyond the limited distribution to teachers and educators permitted by McGraw-Hill for their individual course preparation. If you are a student using this Manual, you are using it without permission.

Chapter 14, Problem 95.

A series-tuned antenna circuit consists of a variable capacitor (40 pF to 360 pF) and a 240-μH antenna coil that has a dc resistance of $12\,\Omega$.

(a) Find the frequency range of radio signals to which the radio is tunable.
(b) Determine the value of Q at each end of the frequency range.

Chapter 14, Solution 95.

(a) $$f_0 = \frac{1}{2\pi\sqrt{LC}}$$

When $C = 360\text{ pF}$,

$$f_0 = \frac{1}{2\pi\sqrt{(240\times10^{-6})(360\times10^{-12})}} = 0.541\text{ MHz}$$

When $C = 40\text{ pF}$,

$$f_0 = \frac{1}{2\pi\sqrt{(240\times10^{-6})(40\times10^{-12})}} = 1.624\text{ MHz}$$

Therefore, the frequency range is

$$\underline{\mathbf{0.541\text{ MHz} < f_0 < 1.624\text{ MHz}}}$$

(b) $$Q = \frac{2\pi fL}{R}$$

At $f_0 = 0.541\text{ MHz}$,

$$Q = \frac{(2\pi)(0.541\times10^{6})(240\times10^{-6})}{12} = \underline{\mathbf{67.98}}$$

At $f_0 = 1.624\text{ MHz}$,

$$Q = \frac{(2\pi)(1.624\times10^{6})(240\times10^{-6})}{12} = \underline{\mathbf{204.1}}$$

PROPRIETARY MATERIAL. © 2007 The McGraw-Hill Companies, Inc. All rights reserved. No part of this Manual may be displayed, reproduced or distributed in any form or by any means, without the prior written permission of the publisher, or used beyond the limited distribution to teachers and educators permitted by McGraw-Hill for their individual course preparation. If you are a student using this Manual, you are using it without permission.

Chapter 14, Problem 96.

The crossover circuit in Fig. 14.108 is a lowpass filter that is connected to a woofer. Find the transfer function $\mathbf{H}(\omega) = \mathbf{V}_o(\omega)/\mathbf{V}_i(\omega)$

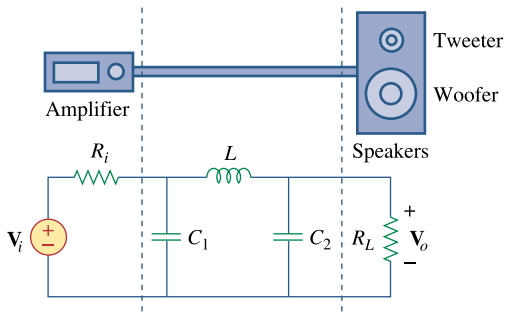

Figure 14.108
For Prob. 14.96.

Chapter 14, Solution 96.

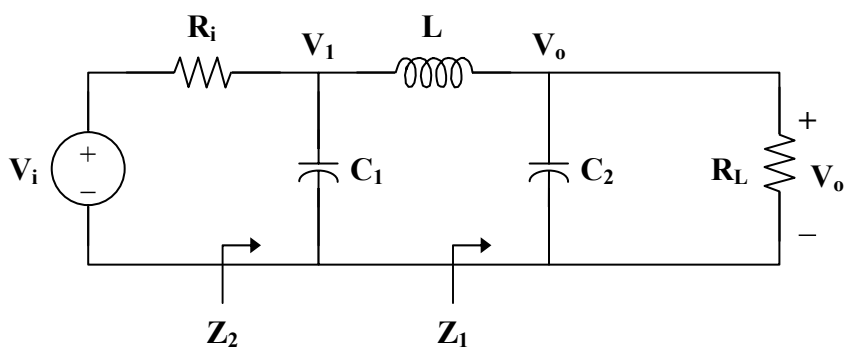

PROPRIETARY MATERIAL. © 2007 The McGraw-Hill Companies, Inc. All rights reserved. No part of this Manual may be displayed, reproduced or distributed in any form or by any means, without the prior written permission of the publisher, or used beyond the limited distribution to teachers and educators permitted by McGraw-Hill for their individual course preparation. If you are a student using this Manual, you are using it without permission.

$$\mathbf{Z}_1 = R_L \parallel \frac{1}{sC_2} = \frac{R_L}{1 + sR_2C_2}$$

$$\mathbf{Z}_2 = \frac{1}{sC_1} \parallel (sL + \mathbf{Z}_1) = \frac{1}{sC_1} \parallel \left(\frac{sL + R_L + s^2R_LC_2L}{1 + sR_LC_2} \right)$$

$$\mathbf{Z}_2 = \frac{\dfrac{1}{sC_1} \cdot \dfrac{sL + R_L + s^2R_LC_2L}{1 + sR_LC_2}}{\dfrac{1}{sC_1} + \dfrac{sL + R_L + s^2R_LC_2L}{1 + sR_LC_2}}$$

$$\mathbf{Z}_2 = \frac{sL + R_L + s^2R_LLC_2}{1 + sR_LC_2 + s^2LC_1 + sR_LC_1 + s^3R_LLC_1C_2}$$

$$\mathbf{V}_1 = \frac{\mathbf{Z}_2}{\mathbf{Z}_2 + R_i}\mathbf{V}_i$$

$$\mathbf{V}_o = \frac{\mathbf{Z}_1}{\mathbf{Z}_1 + sL}\mathbf{V}_1 = \frac{\mathbf{Z}_2}{\mathbf{Z}_2 + R_2} \cdot \frac{\mathbf{Z}_1}{\mathbf{Z}_1 + sL}\mathbf{V}_i$$

$$\frac{\mathbf{V}_o}{\mathbf{V}_i} = \frac{\mathbf{Z}_2}{\mathbf{Z}_2 + R_2} \cdot \frac{\mathbf{Z}_1}{\mathbf{Z}_1 + sL}$$

where

$$\frac{\mathbf{Z}_2}{\mathbf{Z}_2 + R_2} =$$

$$\frac{sL + R_L + s^2R_LLC_2}{sL + R_L + s^2R_LLC_2 + R_i + sR_iR_LC_2 + s^2R_iLC_1 + sR_iR_LC_1 + s^3R_iR_LLC_1C_2}$$

and $\dfrac{\mathbf{Z}_1}{\mathbf{Z}_1 + sL} = \dfrac{R_L}{R_L + sL + s^2R_LLC_2}$

Therefore,

$$\frac{\mathbf{V}_o}{\mathbf{V}_i} = \frac{\mathbf{R_L(sL + R_L + s^2R_LLC_2)}}{\mathbf{(sL + R_L + s^2R_LLC_2 + R_i + sR_iR_LC_2 + s^2R_iLC_1 + sR_iR_LC_1 + s^3R_iR_LLC_1C_2)(R_L + sL + s^2R_LLC_2)}}$$

where $s = j\omega$.

PROPRIETARY MATERIAL. © 2007 The McGraw-Hill Companies, Inc. All rights reserved. No part of this Manual may be displayed, reproduced or distributed in any form or by any means, without the prior written permission of the publisher, or used beyond the limited distribution to teachers and educators permitted by McGraw-Hill for their individual course preparation. If you are a student using this Manual, you are using it without permission.

Chapter 14, Problem 97.

The crossover circuit in Fig. 14.109 is a highpass filter that is connected to a tweeter. Determine the transfer function $\mathbf{H}(\omega) = \mathbf{V}_o(\omega)/\mathbf{V}_i(\omega)$.

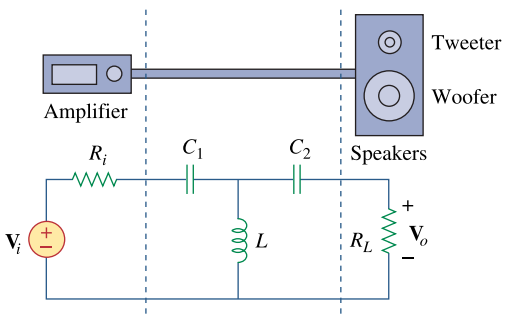

Figure 14.109
For Prob. 14.97.

PROPRIETARY MATERIAL. © 2007 The McGraw-Hill Companies, Inc. All rights reserved. No part of this Manual may be displayed, reproduced or distributed in any form or by any means, without the prior written permission of the publisher, or used beyond the limited distribution to teachers and educators permitted by McGraw-Hill for their individual course preparation. If you are a student using this Manual, you are using it without permission.

Chapter 14, Solution 97.

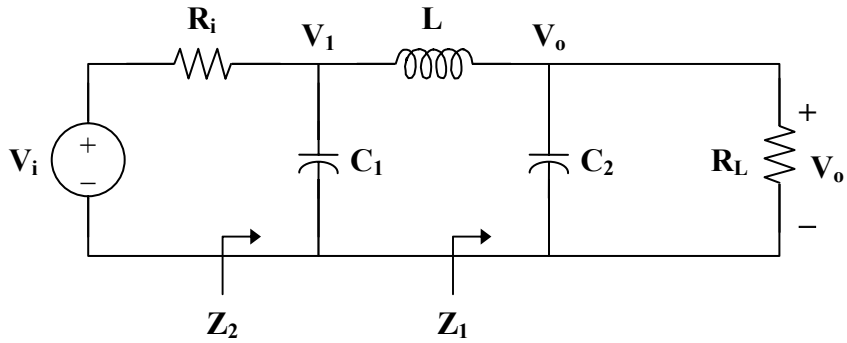

$$\mathbf{Z} = sL \,||\left(R_L + \frac{1}{sC_2}\right) = \frac{sL(R_L + 1/sC_2)}{R_L + sL + 1/sC_2}, \qquad s = j\omega$$

$$\mathbf{V}_1 = \frac{\mathbf{Z}}{\mathbf{Z} + R_i + 1/sC_1}\mathbf{V}_i$$

$$\mathbf{V}_o = \frac{R_L}{R_L + 1/sC_2}\mathbf{V}_1 = \frac{R_L}{R_L + 1/sC_2} \cdot \frac{\mathbf{Z}}{\mathbf{Z} + R_i + 1/sC_1}\mathbf{V}_i$$

$$\mathbf{H}(\omega) = \frac{\mathbf{V}_o}{\mathbf{V}_i} = \frac{R_L}{R_L + 1/sC_2} \cdot \frac{sL(R_L + 1/sC_2)}{sL(R_L + 1/sC_2) + (R_i + 1/sC_1)(R_L + sL + 1/sC_2)}$$

$$\mathbf{H}(\omega) = \underline{\frac{\mathbf{s^3 L R_L C_1 C_2}}{\mathbf{(sR_iC_1 + 1)(s^2LC_2 + sR_LC_2 + 1) + s^2LC_1(sR_LC_2 + 1)}}}$$

where $s = j\omega$.

PROPRIETARY MATERIAL. © 2007 The McGraw-Hill Companies, Inc. All rights reserved. No part of this Manual may be displayed, reproduced or distributed in any form or by any means, without the prior written permission of the publisher, or used beyond the limited distribution to teachers and educators permitted by McGraw-Hill for their individual course preparation. If you are a student using this Manual, you are using it without permission.

Chapter 14, Problem 98.

A certain electronic test circuit produced a resonant curve with half-power points at 432 Hz and 454 Hz. If $Q = 20$, what is the resonant frequency of the circuit?

Chapter 14, Solution 98.

$$B = \omega_2 - \omega_1 = 2\pi(f_2 - f_1) = 2\pi(454 - 432) = 44\pi$$

$$\omega_0 = 2\pi f_0 = QB = (20)(44\pi)$$

$$f_0 = \frac{(20)(44\pi)}{2\pi} = (20)(22) = \underline{\mathbf{440\ Hz}}$$

Chapter 14, Problem 99.

In an electronic device, a series circuit is employed that has a resistance of $100\,\Omega$, a capacitive reactance of $5\ \text{k}\Omega$, and an inductive reactance of $300\,\Omega$ when used at 2 MHz. Find the resonant frequency and bandwidth of the circuit.

Chapter 14, Solution 99.

$$X_c = \frac{1}{\omega C} = \frac{1}{2\pi f\, C}$$

$$C = \frac{1}{2\pi f\, X_c} = \frac{1}{(2\pi)(2\times 10^6)(5\times 10^3)} = \frac{10^{-9}}{20\pi}$$

$$X_L = \omega L = 2\pi f\, L$$

$$L = \frac{X_L}{2\pi f} = \frac{300}{(2\pi)(2\times 10^6)} = \frac{3\times 10^{-4}}{4\pi}$$

$$f_0 = \frac{1}{2\pi\sqrt{LC}} = \frac{1}{2\pi\sqrt{\frac{3\times 10^{-4}}{4\pi}\cdot\frac{10^{-9}}{20\pi}}} = \underline{8.165\ \text{MHz}}$$

$$B = \frac{R}{L} = (100)\left(\frac{4\pi}{3\times 10^{-4}}\right) = \underline{\mathbf{4.188\times 10^6\ rad/s}}$$

PROPRIETARY MATERIAL. © 2007 The McGraw-Hill Companies, Inc. All rights reserved. No part of this Manual may be displayed, reproduced or distributed in any form or by any means, without the prior written permission of the publisher, or used beyond the limited distribution to teachers and educators permitted by McGraw-Hill for their individual course preparation. If you are a student using this Manual, you are using it without permission.

Chapter 14, Problem 100.

In a certain application, a simple *RC* lowpass filter is designed to reduce high frequency noise. If the desired corner frequency is 20 kHz and $C = 0.5\ \mu$F find the value of *R*.

Chapter 14, Solution 100.

$$\omega_c = 2\pi f_c = \frac{1}{RC}$$

$$R = \frac{1}{2\pi f_c C} = \frac{1}{(2\pi)(20\times10^3)(0.5\times10^{-6})} = \underline{\mathbf{15.91\ \Omega}}$$

Chapter 14, Problem 101.

In an amplifier circuit, a simple *RC* highpass filter is needed to block the dc component while passing the time-varying component. If the desired rolloff frequency is 15 Hz and $C = 10\ \mu$F find the value of *R*.

Chapter 14, Solution 101.

$$\omega_c = 2\pi f_c = \frac{1}{RC}$$

$$R = \frac{1}{2\pi f_c C} = \frac{1}{(2\pi)(15)(10\times10^{-6})} = \underline{\mathbf{1.061\ k\Omega}}$$

PROPRIETARY MATERIAL. © 2007 The McGraw-Hill Companies, Inc. All rights reserved. No part of this Manual may be displayed, reproduced or distributed in any form or by any means, without the prior written permission of the publisher, or used beyond the limited distribution to teachers and educators permitted by McGraw-Hill for their individual course preparation. If you are a student using this Manual, you are using it without permission.

Chapter 14, Problem 102.

Practical *RC* filter design should allow for source and load resistances as shown in Fig. 14.110. Let $R = 4\text{k}\Omega$ and $C = 40$-nF. Obtain the cutoff frequency when:

(a) $R_s = 0, R_L = \infty$,

(b) $R_s = 1k\Omega, R_L = 5k\Omega$.

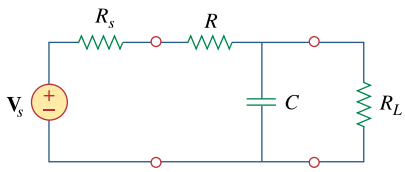

Figure 14.110
For Prob. 14.102.

Chapter 14, Solution 102.

(a) When $R_s = 0$ and $R_L = \infty$, we have a low-pass filter.

$$\omega_c = 2\pi f_c = \frac{1}{RC}$$

$$f_c = \frac{1}{2\pi RC} = \frac{1}{(2\pi)(4\times10^3)(40\times10^{-9})} = \underline{\mathbf{994.7\ Hz}}$$

(b) We obtain R_{Th} across the capacitor.

$$R_{Th} = R_L \parallel (R + R_s)$$

$$R_{Th} = 5 \parallel (4+1) = 2.5\ \text{k}\Omega$$

$$f_c = \frac{1}{2\pi R_{Th} C} = \frac{1}{(2\pi)(2.5\times10^3)(40\times10^{-9})}$$

$$f_c = \underline{\mathbf{1.59\ kHz}}$$

PROPRIETARY MATERIAL. © 2007 The McGraw-Hill Companies, Inc. All rights reserved. No part of this Manual may be displayed, reproduced or distributed in any form or by any means, without the prior written permission of the publisher, or used beyond the limited distribution to teachers and educators permitted by McGraw-Hill for their individual course preparation. If you are a student using this Manual, you are using it without permission.

Chapter 14, Problem 103.

The *RC* circuit in Fig. 14.111 is used for a lead compensator in a system design. Obtain the transfer function of the circuit.

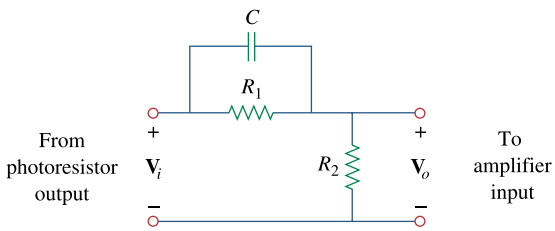

Figure 14.111
For Prob. 14.103.

Chapter 14, Solution 103.

$$\mathbf{H}(\omega) = \frac{\mathbf{V}_o}{\mathbf{V}_i} = \frac{R_2}{R_2 + R_1 \,||\, 1/j\omega C}, \qquad s = j\omega$$

$$\mathbf{H}(s) = \frac{R_2}{R_2 + \dfrac{R_1(1/sC)}{R_1 + 1/sC}} = \frac{R_2\,(R_1 + 1/sC)}{R_1R_2 + (R_1 + R_2)(1/sC)}$$

$$\mathbf{H}(s) = \underline{\frac{R_2(1 + sCR_1)}{R_1 + R_2 + sCR_1R_2}}$$

PROPRIETARY MATERIAL. © 2007 The McGraw-Hill Companies, Inc. All rights reserved. No part of this Manual may be displayed, reproduced or distributed in any form or by any means, without the prior written permission of the publisher, or used beyond the limited distribution to teachers and educators permitted by McGraw-Hill for their individual course preparation. If you are a student using this Manual, you are using it without permission.

Chapter 14, Problem 104.

A low-quality-factor, double-tuned bandpass filter is shown in Fig. 14.112. Use *PSpice* to generate the magnitude plot of $\mathbf{V}_o(\omega)$.

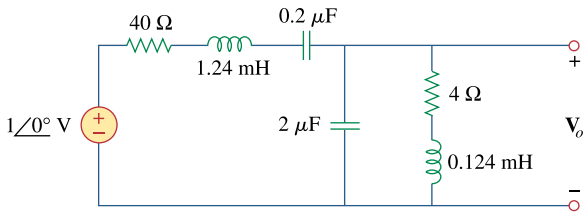

Figure 14.112
For Prob. 14.104.

PROPRIETARY MATERIAL. © 2007 The McGraw-Hill Companies, Inc. All rights reserved. No part of this Manual may be displayed, reproduced or distributed in any form or by any means, without the prior written permission of the publisher, or used beyond the limited distribution to teachers and educators permitted by McGraw-Hill for their individual course preparation. If you are a student using this Manual, you are using it without permission.

Chapter 14, Solution 104.

The schematic is shown below. We click Analysis/Setup/AC Sweep and enter Total Points = 1001, Start Frequency = 100, and End Frequency = 100 k. After simulation, we obtain the magnitude plot of the response as shown.

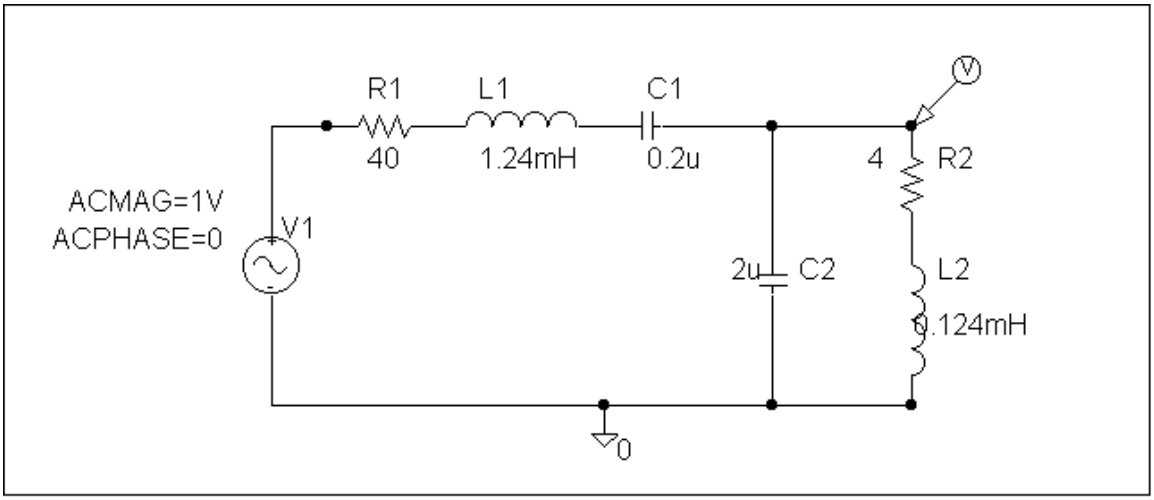

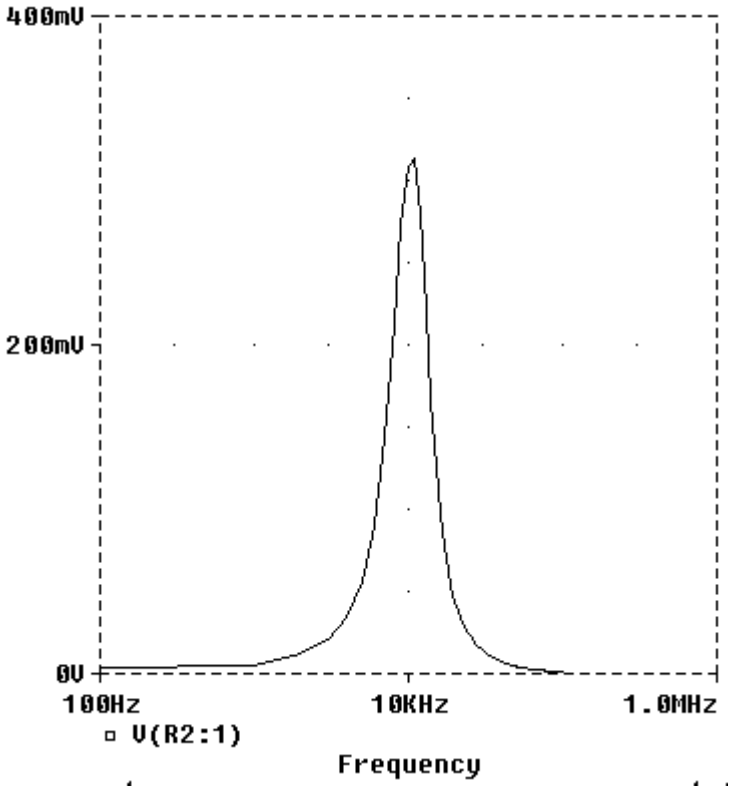

PROPRIETARY MATERIAL. © 2007 The McGraw-Hill Companies, Inc. All rights reserved. No part of this Manual may be displayed, reproduced or distributed in any form or by any means, without the prior written permission of the publisher, or used beyond the limited distribution to teachers and educators permitted by McGraw-Hill for their individual course preparation. If you are a student using this Manual, you are using it without permission.