Chapter 3, Problem 1.

Determine I_x in the circuit shown in Fig. 3.50 using nodal analysis.

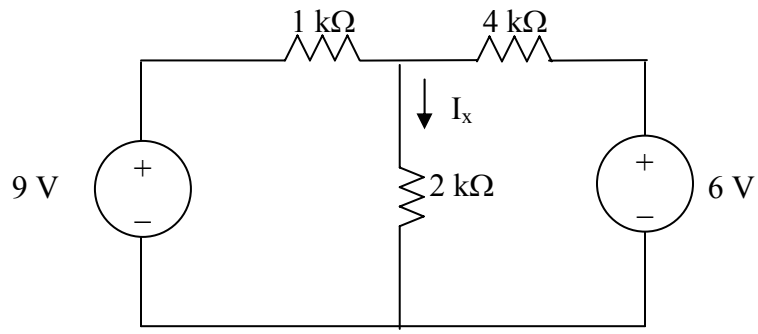

Figure 3.50 For Prob. 3.1.

Chapter 3, Solution 1

Let V_x be the voltage at the node between 1-kΩ and 4-kΩ resistors.

$$\frac{9-V_x}{1k}+\frac{6-V_x}{4k}=\frac{V_k}{2k} \longrightarrow V_x=6$$

$$I_x=\frac{V_x}{2k}=\underline{3\ \text{mA}}$$

PROPRIETARY MATERIAL. © 2007 The McGraw-Hill Companies, Inc. All rights reserved. No part of this Manual may be displayed, reproduced or distributed in any form or by any means, without the prior written permission of the publisher, or used beyond the limited distribution to teachers and educators permitted by McGraw-Hill for their individual course preparation. If you are a student using this Manual, you are using it without permission.

Chapter 3, Problem 2.

For the circuit in Fig. 3.51, obtain v_1 and v_2.

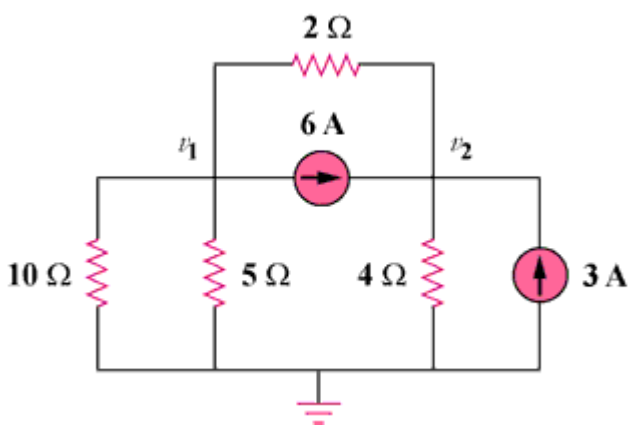

Figure 3.51

Chapter 3, Solution 2

At node 1,

$$\frac{-v_1}{10} - \frac{v_1}{5} = 6 + \frac{v_1 - v_2}{2} \longrightarrow 60 = -8v_1 + 5v_2 \qquad (1)$$

At node 2,

$$\frac{v_2}{4} = 3 + 6 + \frac{v_1 - v_2}{2} \longrightarrow 36 = -2v_1 + 3v_2 \qquad (2)$$

Solving (1) and (2),

$v_1 =$ **0 V**, $v_2 =$ **12 V**

PROPRIETARY MATERIAL. © 2007 The McGraw-Hill Companies, Inc. All rights reserved. No part of this Manual may be displayed, reproduced or distributed in any form or by any means, without the prior written permission of the publisher, or used beyond the limited distribution to teachers and educators permitted by McGraw-Hill for their individual course preparation. If you are a student using this Manual, you are using it without permission.

Chapter 3, Problem 3.

Find the currents i_1 through i_4 and the voltage v_o in the circuit in Fig. 3.52.

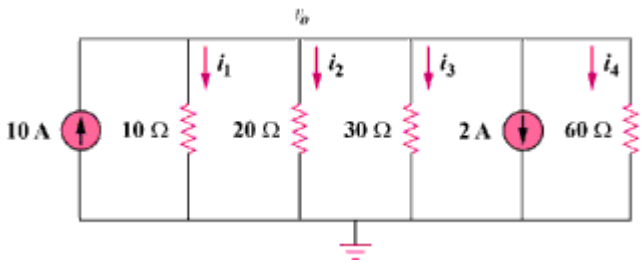

Figure 3.52

Chapter 3, Solution 3

Applying KCL to the upper node,

$$10 = \frac{v_0}{10} + \frac{v_o}{20} + \frac{v_o}{30} + 2 + \frac{v_0}{60} \longrightarrow \quad v_0 = \underline{\mathbf{40\ V}}$$

$$i_1 = \frac{v_0}{10} = \underline{\mathbf{4\ A}}\ ,\ i_2 = \frac{v_0}{20} = \underline{\mathbf{2\ A}},\ i_3 = \frac{v_0}{30} = \underline{\mathbf{1.3333\ A}},\ i_4 = \frac{v_0}{60} = \underline{\mathbf{666.7\ mA}}$$

PROPRIETARY MATERIAL. © 2007 The McGraw-Hill Companies, Inc. All rights reserved. No part of this Manual may be displayed, reproduced or distributed in any form or by any means, without the prior written permission of the publisher, or used beyond the limited distribution to teachers and educators permitted by McGraw-Hill for their individual course preparation. If you are a student using this Manual, you are using it without permission.

Chapter 3, Problem 4.

Given the circuit in Fig. 3.53, calculate the currents i_1 through i_4.

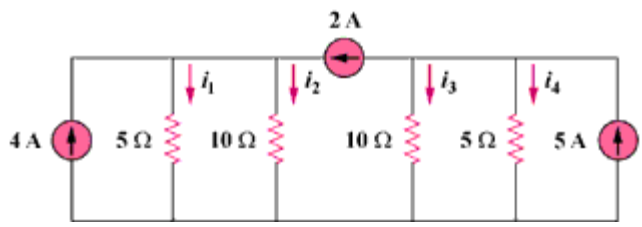

Figure 3.53

Chapter 3, Solution 4

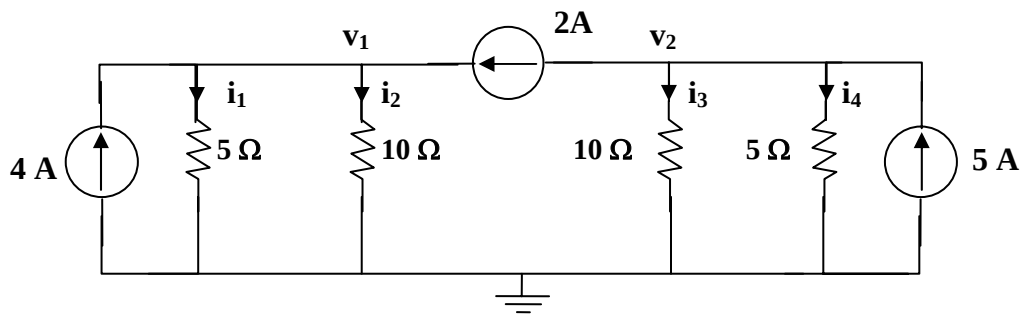

At node 1,

$$4 + 2 = v_1/(5) + v_1/(10) \longrightarrow v_1 = 20$$

At node 2,

$$5 - 2 = v_2/(10) + v_2/(5) \longrightarrow v_2 = 10$$

$i_1 = v_1/(5) =$ **4 A**, $i_2 = v_1/(10) =$ **2 A**, $i_3 = v_2/(10) =$ **1 A**, $i_4 = v_2/(5) =$ **2 A**

PROPRIETARY MATERIAL. © 2007 The McGraw-Hill Companies, Inc. All rights reserved. No part of this Manual may be displayed, reproduced or distributed in any form or by any means, without the prior written permission of the publisher, or used beyond the limited distribution to teachers and educators permitted by McGraw-Hill for their individual course preparation. If you are a student using this Manual, you are using it without permission.

Chapter 3, Problem 5.

Obtain v_0 in the circuit of Fig. 3.54.

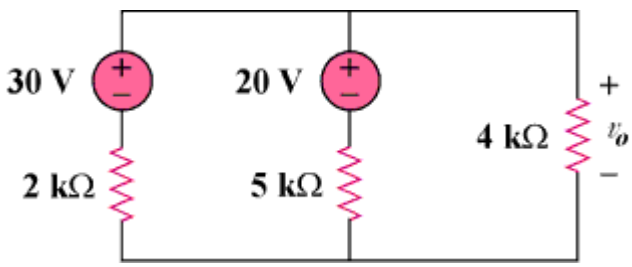

Figure 3.54

Chapter 3, Solution 5

Apply KCL to the top node.

$$\frac{30 - v_0}{2k} + \frac{20 - v_0}{5k} = \frac{v_0}{4k} \longrightarrow v_0 = \underline{\mathbf{20\ V}}$$

Chapter 3, Problem 6.

Use nodal analysis to obtain $\boldsymbol{v_0}$ in the circuit in Fig. 3.55.

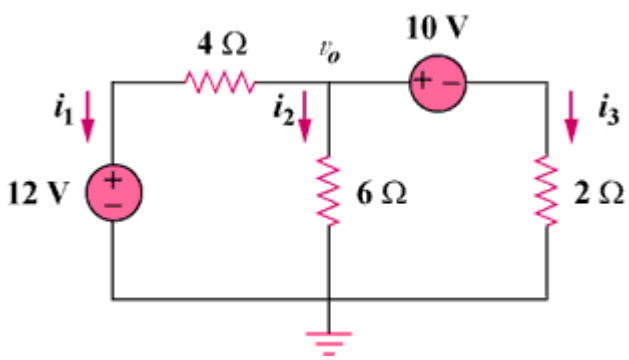

Figure 3.55

Chapter 3, Solution 6

$$i_1 + i_2 + i_3 = 0 \qquad \frac{v_2 - 12}{4} + \frac{v_0}{6} + \frac{v_0 - 10}{2} = 0$$

or $v_0 = \underline{\mathbf{8.727\ V}}$

PROPRIETARY MATERIAL. © 2007 The McGraw-Hill Companies, Inc. All rights reserved. No part of this Manual may be displayed, reproduced or distributed in any form or by any means, without the prior written permission of the publisher, or used beyond the limited distribution to teachers and educators permitted by McGraw-Hill for their individual course preparation. If you are a student using this Manual, you are using it without permission.

Chapter 3, Problem 7.

Apply nodal analysis to solve for V_x in the circuit in Fig. 3.56.

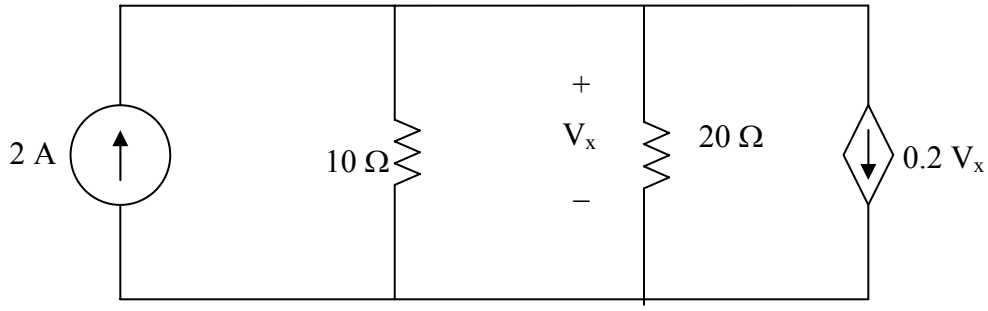

Figure 3.56 For Prob. 3.7.

Chapter 3, Solution 7

$$-2+\frac{V_x-0}{10}+\frac{V_x-0}{20}+0.2V_x=0$$

$0.35V_x = 2$ or $V_x =$ **5.714 V**.

Substituting into the original equation for a check we get,

0.5714 + 0.2857 + 1.1428 = 1.9999 checks!

PROPRIETARY MATERIAL. © 2007 The McGraw-Hill Companies, Inc. All rights reserved. No part of this Manual may be displayed, reproduced or distributed in any form or by any means, without the prior written permission of the publisher, or used beyond the limited distribution to teachers and educators permitted by McGraw-Hill for their individual course preparation. If you are a student using this Manual, you are using it without permission.

Chapter 3, Problem 8.

Using nodal analysis, find v_0 in the circuit in Fig. 3.57.

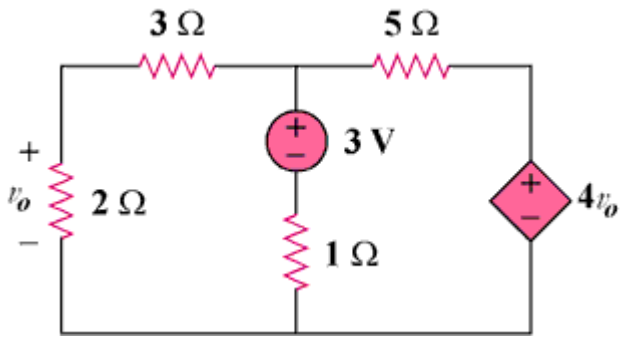

Figure 3.57

Chapter 3, Solution 8

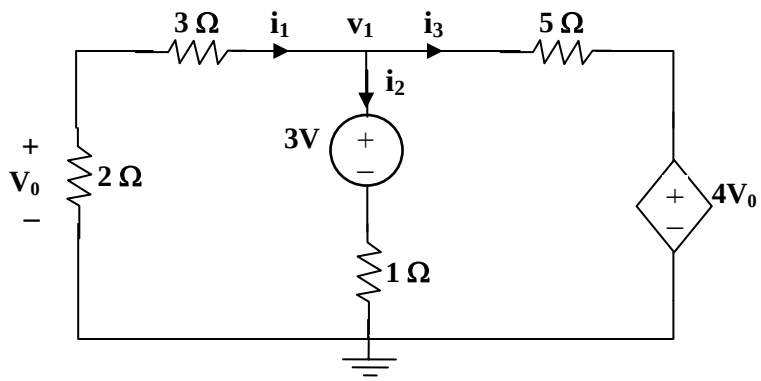

$$i_1 + i_2 + i_3 = 0 \longrightarrow \frac{v_1}{5} + \frac{v_1 - 3}{1} + \frac{v_1 - 4v_0}{5} = 0$$

But $v_0 = \frac{2}{5}v_1$ so that $v_1 + 5v_1 - 15 + v_1 - \frac{8}{5}v_1 = 0$

or $v_1 = 15x5/(27) = 2.778$ V, therefore $v_o = 2v_1/5 =$ **1.1111 V**

PROPRIETARY MATERIAL. © 2007 The McGraw-Hill Companies, Inc. All rights reserved. No part of this Manual may be displayed, reproduced or distributed in any form or by any means, without the prior written permission of the publisher, or used beyond the limited distribution to teachers and educators permitted by McGraw-Hill for their individual course preparation. If you are a student using this Manual, you are using it without permission.

Chapter 3, Problem 9.

Determine I_b in the circuit in Fig. 3.58 using nodal analysis.

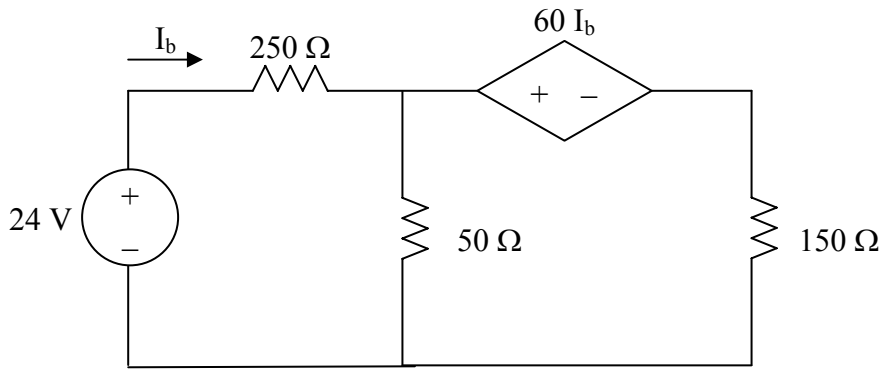

Figure 3.58 For Prob. 3.9.

Chapter 3, Solution 9

Let V_1 be the unknown node voltage to the right of the 250-Ω resistor. Let the ground reference be placed at the bottom of the 50-Ω resistor. This leads to the following nodal equation:

$$\frac{V_1 - 24}{250} + \frac{V_1 - 0}{50} + \frac{V_1 - 60I_b - 0}{150} = 0$$

simplifying we get

$$3V_1 - 72 + 15V_1 + 5V_1 - 300I_b = 0$$

But $I_b = \dfrac{24 - V_1}{250}$. Substituting this into the nodal equation leads to

$$24.2V_1 - 100.8 = 0 \quad \text{or } V_1 = 4.165 \text{ V.}$$

Thus, $I_b = (24 - 4.165)/250 =$ **79.34 mA**.

PROPRIETARY MATERIAL. © 2007 The McGraw-Hill Companies, Inc. All rights reserved. No part of this Manual may be displayed, reproduced or distributed in any form or by any means, without the prior written permission of the publisher, or used beyond the limited distribution to teachers and educators permitted by McGraw-Hill for their individual course preparation. If you are a student using this Manual, you are using it without permission.

Chapter 3, Problem 10.

Find i_0 in the circuit in Fig. 3.59.

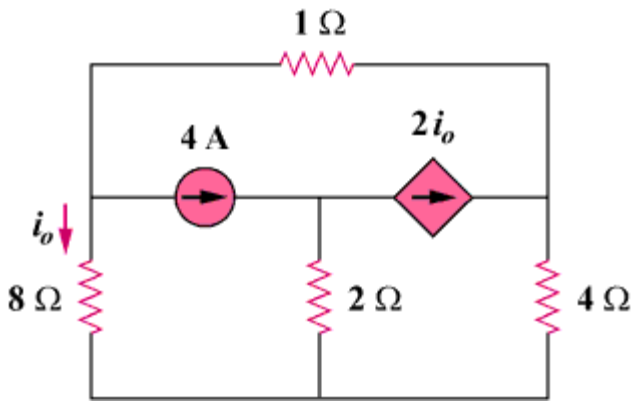

Figure 3.59

Chapter 3, Solution 10

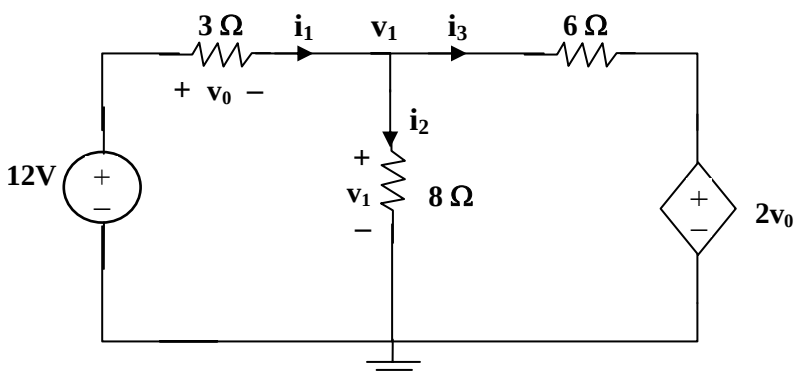

At the non-reference node,

$$\frac{12 - v_1}{3} = \frac{v_1}{8} + \frac{v_1 - 2v_0}{6} \qquad (1)$$

But

$$-12 + v_0 + v_1 = 0 \longrightarrow v_0 = 12 - v_1 \qquad (2)$$

Substituting (2) into (1),

$$\frac{12 - v_1}{3} = \frac{v_1}{8} + \frac{3v_1 - 24}{6} \longrightarrow v_0 = \underline{\mathbf{3.652\ V}}$$

PROPRIETARY MATERIAL. © 2007 The McGraw-Hill Companies, Inc. All rights reserved. No part of this Manual may be displayed, reproduced or distributed in any form or by any means, without the prior written permission of the publisher, or used beyond the limited distribution to teachers and educators permitted by McGraw-Hill for their individual course preparation. If you are a student using this Manual, you are using it without permission.

Chapter 3, Problem 11.

Find V_o and the power dissipated in all the resistors in the circuit of Fig. 3.60.

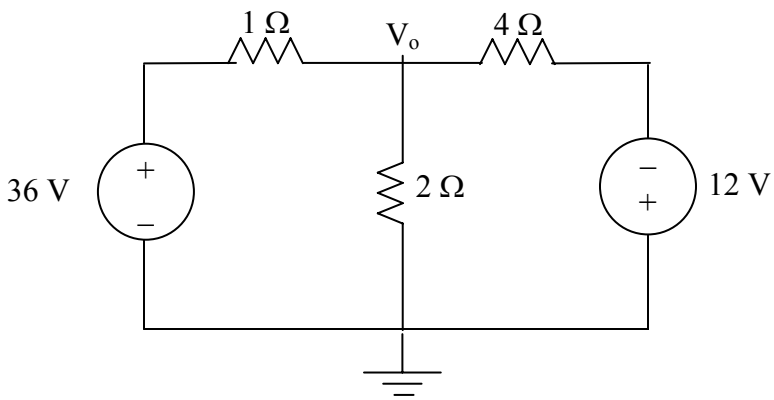

Figure 3.60 For Prob. 3.11.

Chapter 3, Solution 11

At the top node, KVL gives

$$\frac{V_o - 36}{1} + \frac{V_o - 0}{2} + \frac{V_o - (-12)}{4} = 0$$

$1.75V_o = 33$ or $V_o = 18.857V$

$P_{1\Omega} = (36–18.857)^2/1 =$ **293.9 W**

$P_{2\Omega} = (V_o)^2/2 = (18.857)^2/2 =$ **177.79 W**

$P_{4\Omega} = (18.857+12)^2/4 =$ **238 W**.

PROPRIETARY MATERIAL. © 2007 The McGraw-Hill Companies, Inc. All rights reserved. No part of this Manual may be displayed, reproduced or distributed in any form or by any means, without the prior written permission of the publisher, or used beyond the limited distribution to teachers and educators permitted by McGraw-Hill for their individual course preparation. If you are a student using this Manual, you are using it without permission.

Chapter 3, Problem 12.

Using nodal analysis, determine V_o in the circuit in Fig. 3.61.

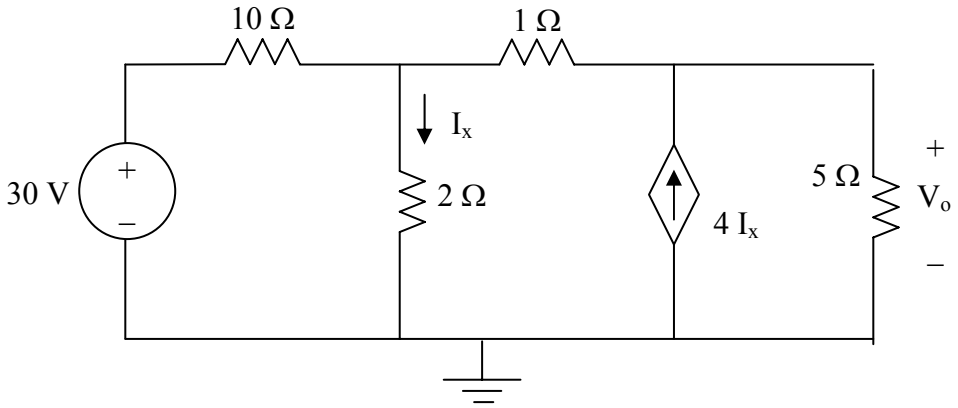

Figure 3.61 For Prob. 3.12.

PROPRIETARY MATERIAL. © 2007 The McGraw-Hill Companies, Inc. All rights reserved. No part of this Manual may be displayed, reproduced or distributed in any form or by any means, without the prior written permission of the publisher, or used beyond the limited distribution to teachers and educators permitted by McGraw-Hill for their individual course preparation. If you are a student using this Manual, you are using it without permission.

Chapter 3, Solution 12

There are two unknown nodes, as shown in the circuit below.

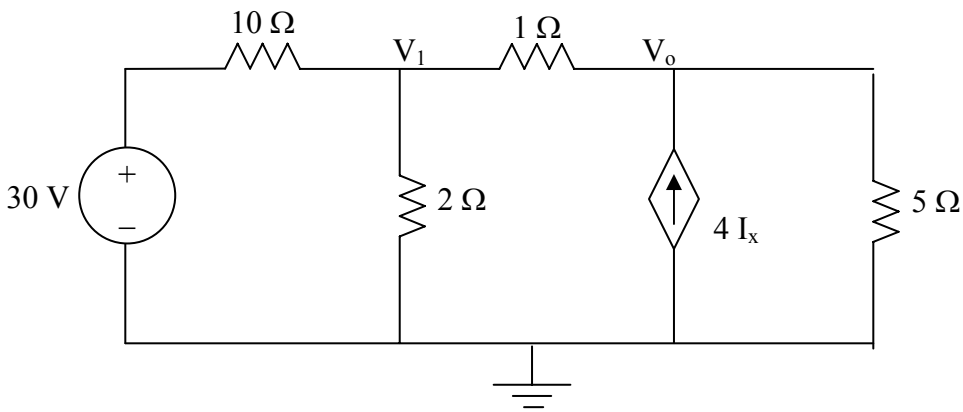

At node 1,

$$\frac{V_1 - 30}{10} + \frac{V_1 - 0}{2} + \frac{V_1 - V_o}{1} = 0 \qquad (1)$$

$$16V_1 - 10V_o = 30$$

At node o,

$$\frac{V_o - V_1}{1} - 4I_x + \frac{V_o - 0}{5} = 0 \qquad (2)$$

$$-5V_1 + 6V_o - 20I_x = 0$$

But $I_x = V_1/2$. Substituting this in (2) leads to

$$-15V_1 + 6V_o = 0 \text{ or } V_1 = 0.4V_o \qquad (3)$$

Substituting (3) into 1,

$$16(0.4V_o) - 10V_o = 30 \text{ or } V_o = \underline{\mathbf{-8.333\ V}}.$$

PROPRIETARY MATERIAL. © 2007 The McGraw-Hill Companies, Inc. All rights reserved. No part of this Manual may be displayed, reproduced or distributed in any form or by any means, without the prior written permission of the publisher, or used beyond the limited distribution to teachers and educators permitted by McGraw-Hill for their individual course preparation. If you are a student using this Manual, you are using it without permission.

Chapter 3, Problem 13.

Calculate v_1 and v_2 in the circuit of Fig. 3.62 using nodal analysis.

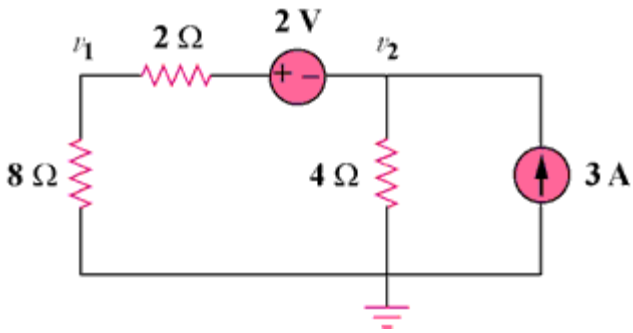

Figure 3.62

Chapter 3, Solution 13

At node number 2, $[(v_2 + 2) - 0]/10 + v_2/4 = 3$ or $v_2 =$ **8 volts**

But, $I = [(v_2 + 2) - 0]/10 = (8 + 2)/10 = 1$ amp and $v_1 = 8x1 =$ **8volts**

PROPRIETARY MATERIAL. © 2007 The McGraw-Hill Companies, Inc. All rights reserved. No part of this Manual may be displayed, reproduced or distributed in any form or by any means, without the prior written permission of the publisher, or used beyond the limited distribution to teachers and educators permitted by McGraw-Hill for their individual course preparation. If you are a student using this Manual, you are using it without permission.

Chapter 3, Problem 14.

Using nodal analysis, find v_o in the circuit of Fig. 3.63.

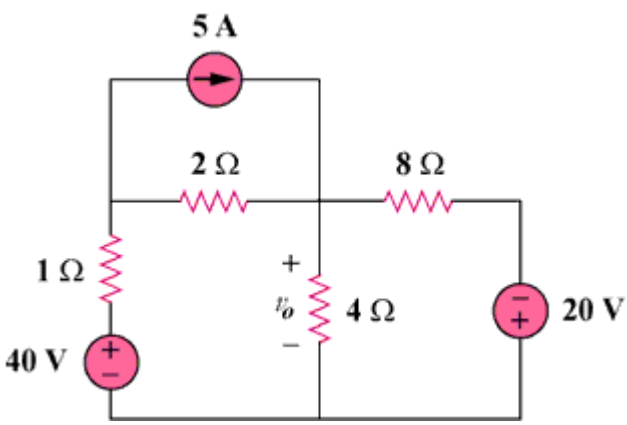

Figure 3.63

Chapter 3, Solution 14

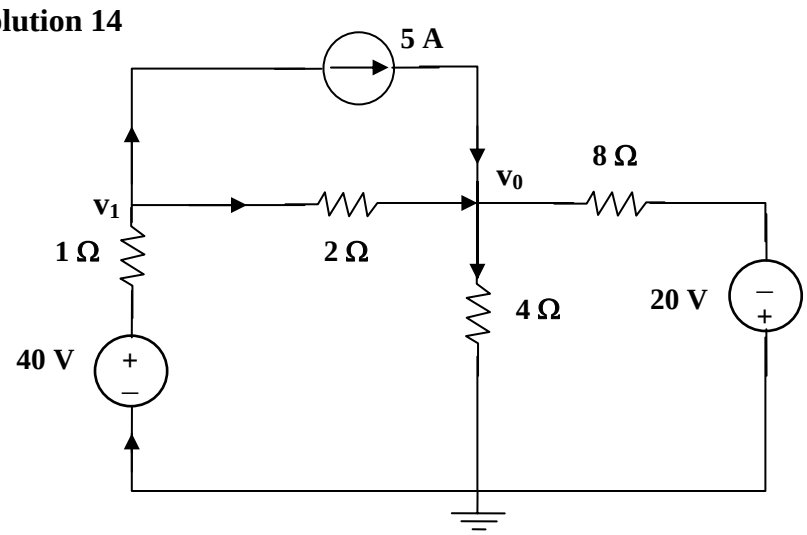

At node 1, $\frac{v_1 - v_0}{2} + 5 = \frac{40 - v_0}{1} \longrightarrow v_1 + v_0 = 70$ (1)

At node 0, $\frac{v_1 - v_0}{2} + 5 = \frac{v_0}{4} + \frac{v_0 + 20}{8} \longrightarrow 4v_1 - 7v_0 = -20$ (2)

Solving (1) and (2), $v_0 =$ **27.27 V**

PROPRIETARY MATERIAL. © 2007 The McGraw-Hill Companies, Inc. All rights reserved. No part of this Manual may be displayed, reproduced or distributed in any form or by any means, without the prior written permission of the publisher, or used beyond the limited distribution to teachers and educators permitted by McGraw-Hill for their individual course preparation. If you are a student using this Manual, you are using it without permission.

Chapter 3, Problem 15.

Apply nodal analysis to find i_o and the power dissipated in each resistor in the circuit of Fig. 3.64.

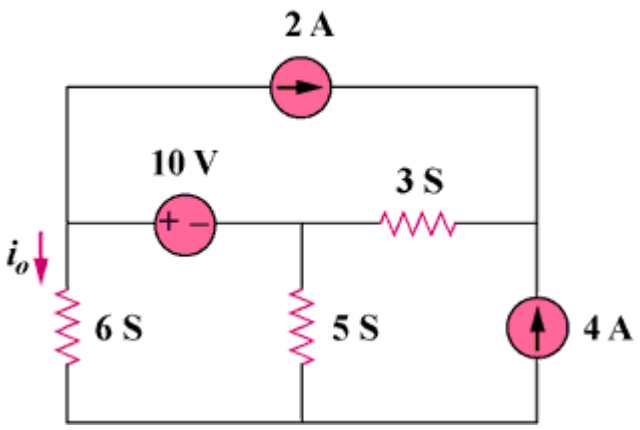

Figure 3.64

PROPRIETARY MATERIAL. © 2007 The McGraw-Hill Companies, Inc. All rights reserved. No part of this Manual may be displayed, reproduced or distributed in any form or by any means, without the prior written permission of the publisher, or used beyond the limited distribution to teachers and educators permitted by McGraw-Hill for their individual course preparation. If you are a student using this Manual, you are using it without permission.

Chapter 3, Solution 15

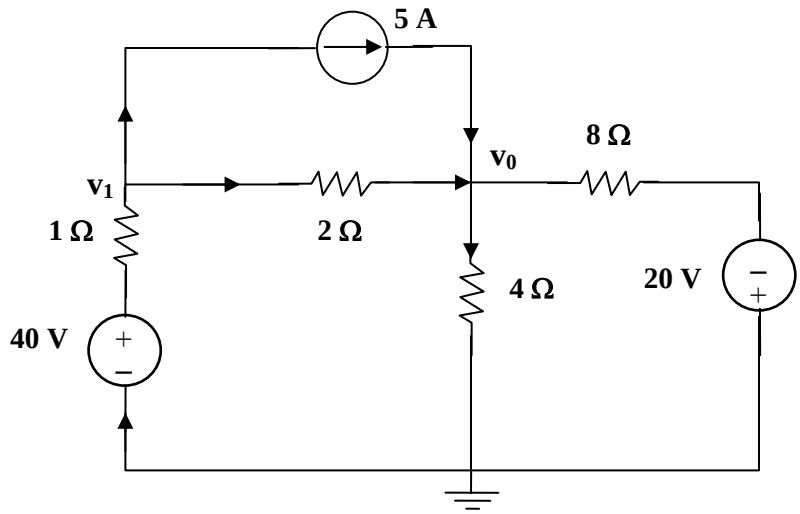

Nodes 1 and 2 form a supernode so that $v_1 = v_2 + 10$ (1)

At the supernode, $2 + 6v_1 + 5v_2 = 3\,(v_3 - v_2) \longrightarrow 2 + 6v_1 + 8v_2 = 3v_3$ (2)

At node 3, $2 + 4 = 3\,(v_3 - v_2) \longrightarrow v_3 = v_2 + 2$ (3)

Substituting (1) and (3) into (2),

$$2 + 6v_2 + 60 + 8v_2 = 3v_2 + 6 \longrightarrow v_2 = \frac{-56}{11}$$

$$v_1 = v_2 + 10 = \frac{54}{11}$$

$$i_0 = 6v_i = \underline{\mathbf{29.45\ A}}$$

$$P_{65} = \frac{v_1^2}{R} = v_1^2 G = \left(\frac{54}{11}\right)^2 6 = \underline{\mathbf{144.6\ W}}$$

$$P_{55} = v_2^2 G = \left(\frac{-56}{11}\right)^2 5 = \underline{\mathbf{129.6\ W}}$$

$$P_{35} = (v_L - v_3)^2 G = (2)^2\, 3 = \underline{\mathbf{12\ W}}$$

PROPRIETARY MATERIAL. © 2007 The McGraw-Hill Companies, Inc. All rights reserved. No part of this Manual may be displayed, reproduced or distributed in any form or by any means, without the prior written permission of the publisher, or used beyond the limited distribution to teachers and educators permitted by McGraw-Hill for their individual course preparation. If you are a student using this Manual, you are using it without permission.

Chapter 3, Problem 16.

Determine voltages v_1 through v_3 in the circuit of Fig. 3.65 using nodal analysis.

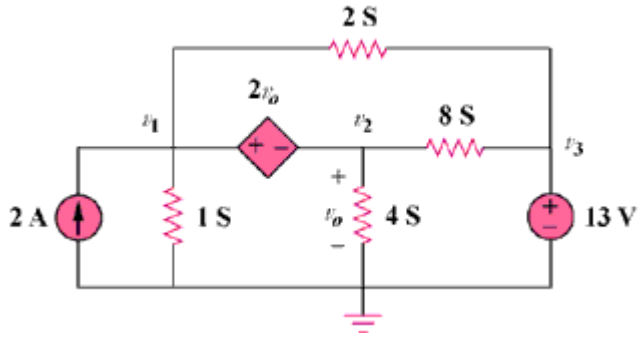

Figure 3.65

Chapter 3, Solution 16

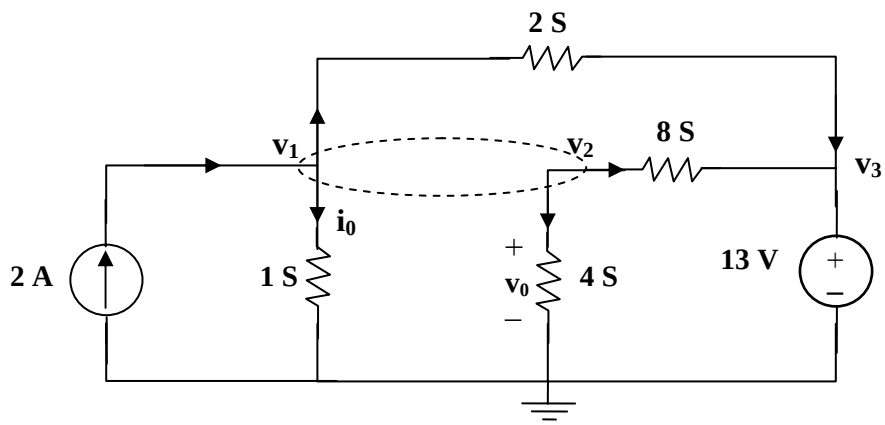

At the supernode,

$$2 = v_1 + 2\,(v_1 - v_3) + 8(v_2 - v_3) + 4v_2, \text{ which leads to } 2 = 3v_1 + 12v_2 - 10v_3 \qquad (1)$$

But

$$v_1 = v_2 + 2v_0 \text{ and } v_0 = v_2.$$

Hence

$$v_1 = 3v_2 \qquad (2)$$
$$v_3 = 13\text{V} \qquad (3)$$

Substituting (2) and (3) with (1) gives,

$$v_1 = \underline{\mathbf{18.858\ V}},\ v_2 = \underline{\mathbf{6.286\ V}},\ v_3 = \underline{\mathbf{13\ V}}$$

PROPRIETARY MATERIAL. © 2007 The McGraw-Hill Companies, Inc. All rights reserved. No part of this Manual may be displayed, reproduced or distributed in any form or by any means, without the prior written permission of the publisher, or used beyond the limited distribution to teachers and educators permitted by McGraw-Hill for their individual course preparation. If you are a student using this Manual, you are using it without permission.

Chapter 3, Problem 17.

Using nodal analysis, find current i_o in the circuit of Fig. 3.66.

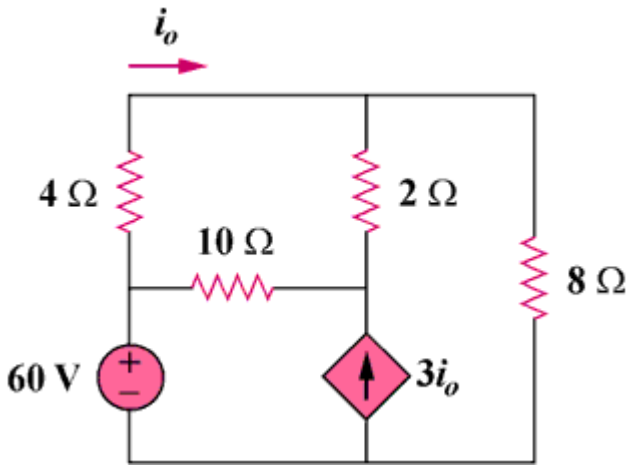

Figure 3.66

PROPRIETARY MATERIAL. © 2007 The McGraw-Hill Companies, Inc. All rights reserved. No part of this Manual may be displayed, reproduced or distributed in any form or by any means, without the prior written permission of the publisher, or used beyond the limited distribution to teachers and educators permitted by McGraw-Hill for their individual course preparation. If you are a student using this Manual, you are using it without permission.

Chapter 3, Solution 17

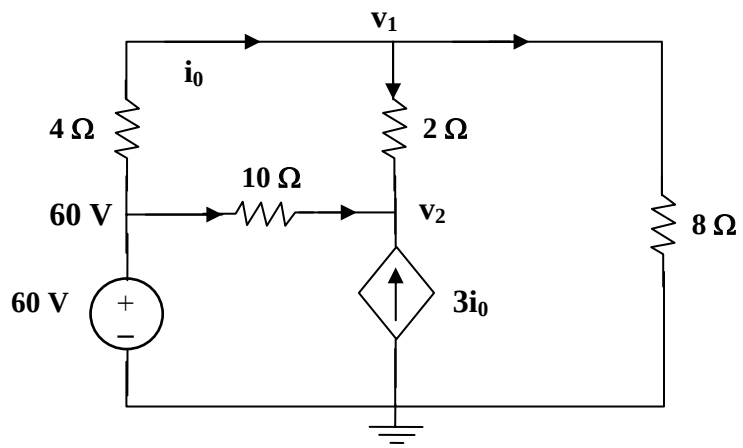

At node 1, $\frac{60 - v_1}{4} = \frac{v_1}{8} + \frac{v_1 - v_2}{2}$ $\qquad 120 = 7v_1 - 4v_2 \qquad (1)$

At node 2, $3i_0 + \frac{60 - v_2}{10} + \frac{v_1 - v_2}{2} = 0$

But $i_0 = \frac{60 - v_1}{4}$.

Hence

$$\frac{3(60 - v_1)}{4} + \frac{60 - v_2}{10} + \frac{v_1 - v_2}{2} = 0 \longrightarrow 1020 = 5v_1 + 12v_2 \qquad (2)$$

Solving (1) and (2) gives $v_1 = 53.08$ V. Hence $i_0 = \frac{60 - v_1}{4} =$ **1.73 A**

PROPRIETARY MATERIAL. © 2007 The McGraw-Hill Companies, Inc. All rights reserved. No part of this Manual may be displayed, reproduced or distributed in any form or by any means, without the prior written permission of the publisher, or used beyond the limited distribution to teachers and educators permitted by McGraw-Hill for their individual course preparation. If you are a student using this Manual, you are using it without permission.

Chapter 3, Problem 18.

Determine the node voltages in the circuit in Fig. 3.67 using nodal analysis.

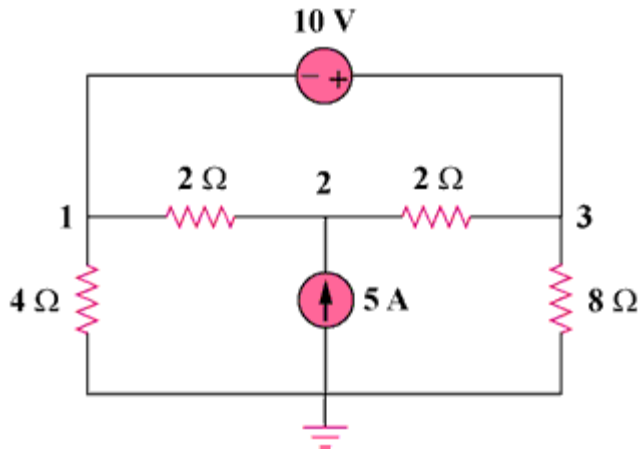

Figure 3.67

Chapter 3, Solution 18

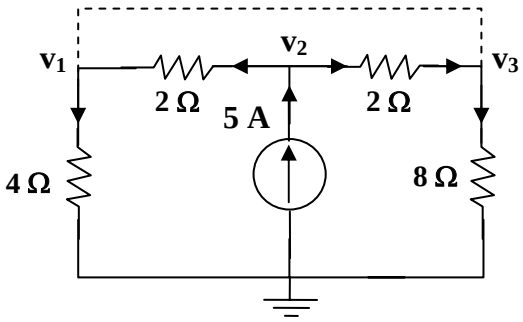

(a)

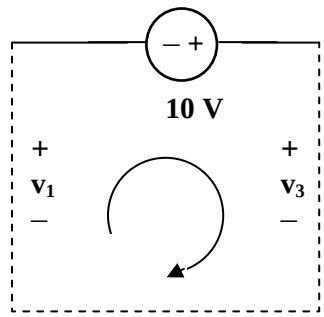

(b)

At node 2, in Fig. (a), $5 = \dfrac{v_2 - v_1}{2} + \dfrac{v_2 - v_3}{2} \longrightarrow 10 = -v_1 + 2v_2 - v_3$ (1)

At the supernode, $\dfrac{v_2 - v_1}{2} + \dfrac{v_2 - v_3}{2} = \dfrac{v_1}{4} + \dfrac{v_3}{8} \longrightarrow 40 = 2v_1 + v_3$ (2)

From Fig. (b), $-v_1 - 10 + v_3 = 0 \longrightarrow v_3 = v_1 + 10$ (3)

Solving (1) to (3), we obtain $v_1 =$ **10 V**, $v_2 =$ **20 V** $= v_3$

PROPRIETARY MATERIAL. © 2007 The McGraw-Hill Companies, Inc. All rights reserved. No part of this Manual may be displayed, reproduced or distributed in any form or by any means, without the prior written permission of the publisher, or used beyond the limited distribution to teachers and educators permitted by McGraw-Hill for their individual course preparation. If you are a student using this Manual, you are using it without permission.

Chapter 3, Problem 19.

Use nodal analysis to find v_1, v_2, and v_3 in the circuit in Fig. 3.68.

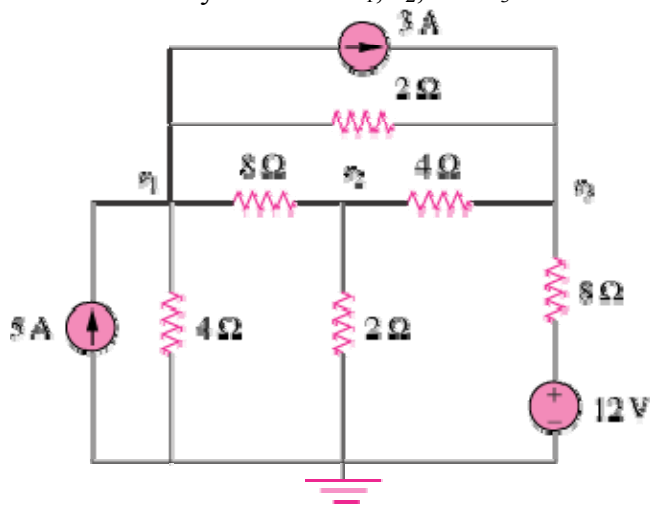

Figure 3.68

Chapter 3, Solution 19

At node 1,

$$5 = 3 + \frac{V_1 - V_3}{2} + \frac{V_1 - V_2}{8} + \frac{V_1}{4} \quad \longrightarrow \quad 16 = 7V_1 - V_2 - 4V_3 \qquad (1)$$

At node 2,

$$\frac{V_1 - V_2}{8} = \frac{V_2}{2} + \frac{V_2 - V_3}{4} \quad \longrightarrow \quad 0 = -V_1 + 7V_2 - 2V_3 \qquad (2)$$

At node 3,

$$3 + \frac{12 - V_3}{8} + \frac{V_1 - V_3}{2} + \frac{V_2 - V_3}{4} = 0 \quad \longrightarrow \quad -36 = 4V_1 + 2V_2 - 7V_3 \quad (3)$$

From (1) to (3),

$$\begin{pmatrix} 7 & -1 & -4 \\ -1 & 7 & -2 \\ 4 & 2 & -7 \end{pmatrix} \begin{pmatrix} V_1 \\ V_2 \\ V_3 \end{pmatrix} = \begin{pmatrix} 16 \\ 0 \\ -36 \end{pmatrix} \quad \longrightarrow \quad AV = B$$

Using MATLAB,

$$V = A^{-1}B = \begin{bmatrix} 10 \\ 4.933 \\ 12.267 \end{bmatrix} \quad \longrightarrow \quad \underline{V_1 = 10\text{ V},\ V_2 = 4.933\text{ V},\ V_3 = 12.267\text{ V}}$$

PROPRIETARY MATERIAL. © 2007 The McGraw-Hill Companies, Inc. All rights reserved. No part of this Manual may be displayed, reproduced or distributed in any form or by any means, without the prior written permission of the publisher, or used beyond the limited distribution to teachers and educators permitted by McGraw-Hill for their individual course preparation. If you are a student using this Manual, you are using it without permission.

Chapter 3, Problem 20.

For the circuit in Fig. 3.69, find v_1, v_2, and v_3 using nodal analysis.

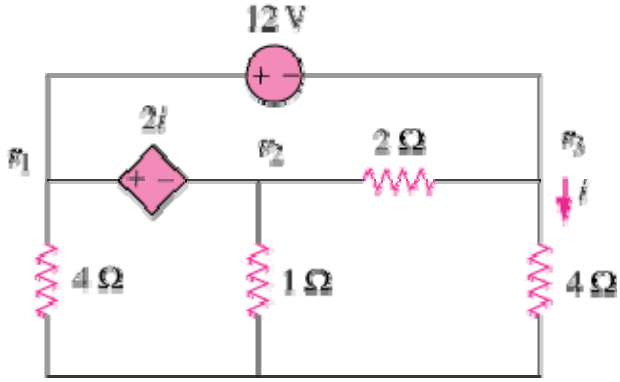

Figure 3.69

Chapter 3, Solution 20

Nodes 1 and 2 form a supernode; so do nodes 1 and 3. Hence

$$\frac{V_1}{4}+\frac{V_2}{1}+\frac{V_3}{4}=0 \qquad \longrightarrow \qquad V_1+4V_2+V_3=0 \qquad (1)$$

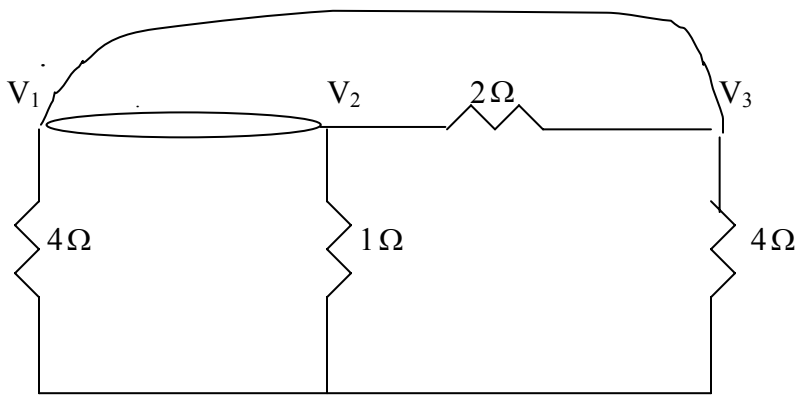

Between nodes 1 and 3,

$$-V_1+12+V_3=0 \qquad \longrightarrow \qquad V_3=V_1-12 \qquad (2)$$

Similarly, between nodes 1 and 2,

$$V_1=V_2+2i \qquad (3)$$

But $i=V_3/4$. Combining this with (2) and (3) gives

$$V_2=6+V_1/2 \qquad (4)$$

Solving (1), (2), and (4) leads to

$$\underline{V_1=-3\text{V},\quad V_2=4.5\text{V}, V_3=-15\text{V}}$$

PROPRIETARY MATERIAL. © 2007 The McGraw-Hill Companies, Inc. All rights reserved. No part of this Manual may be displayed, reproduced or distributed in any form or by any means, without the prior written permission of the publisher, or used beyond the limited distribution to teachers and educators permitted by McGraw-Hill for their individual course preparation. If you are a student using this Manual, you are using it without permission.

Chapter 3, Problem 21.

For the circuit in Fig. 3.70, find v_1 and v_2 using nodal analysis.

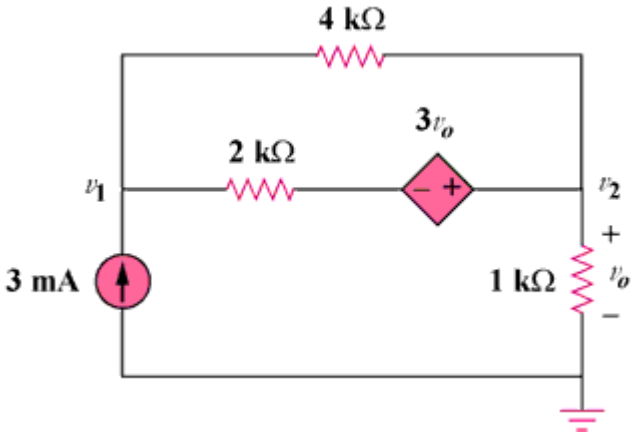

Figure 3.70

PROPRIETARY MATERIAL. © 2007 The McGraw-Hill Companies, Inc. All rights reserved. No part of this Manual may be displayed, reproduced or distributed in any form or by any means, without the prior written permission of the publisher, or used beyond the limited distribution to teachers and educators permitted by McGraw-Hill for their individual course preparation. If you are a student using this Manual, you are using it without permission.

Chapter 3, Solution 21

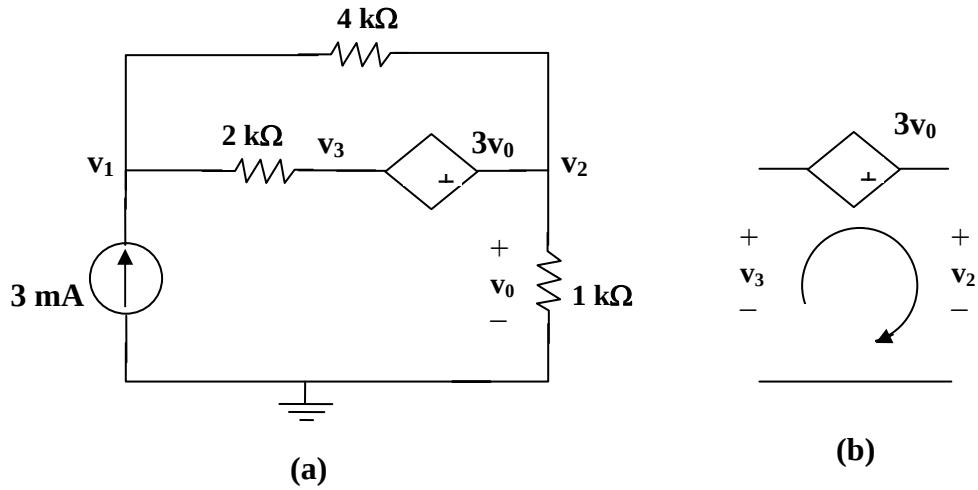

Let v_3 be the voltage between the 2kΩ resistor and the voltage-controlled voltage source. At node 1,

$$3\text{x}10^{-3} = \frac{v_1 - v_2}{4000} + \frac{v_1 - v_3}{2000} \longrightarrow 12 = 3v_1 - v_2 - 2v_3 \qquad (1)$$

At node 2,

$$\frac{v_1 - v_2}{4} + \frac{v_1 - v_3}{2} = \frac{v_2}{1} \longrightarrow 3v_1 - 5v_2 - 2v_3 = 0 \qquad (2)$$

Note that $v_0 = v_2$. We now apply KVL in Fig. (b)

$$-v_3 - 3v_2 + v_2 = 0 \longrightarrow v_3 = -2v_2 \qquad (3)$$

From (1) to (3),

$v_1 =$ **1 V**, $v_2 =$ **3 V**

PROPRIETARY MATERIAL. © 2007 The McGraw-Hill Companies, Inc. All rights reserved. No part of this Manual may be displayed, reproduced or distributed in any form or by any means, without the prior written permission of the publisher, or used beyond the limited distribution to teachers and educators permitted by McGraw-Hill for their individual course preparation. If you are a student using this Manual, you are using it without permission.

Chapter 3, Problem 22.

Determine v_1 and v_2 in the circuit in Fig. 3.71.

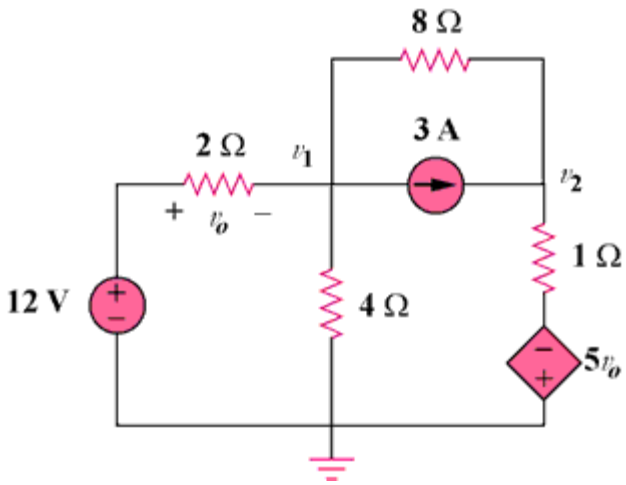

Figure 3.71

Chapter 3, Solution 22

At node 1, $\frac{12 - v_0}{2} = \frac{v_1}{4} + 3 + \frac{v_1 - v_0}{8} \longrightarrow 24 = 7v_1 - v_2$ (1)

At node 2, $3 + \frac{v_1 - v_2}{8} = \frac{v_2 + 5v_2}{1}$

But, $v_1 = 12 - v_1$

Hence, $24 + v_1 - v_2 = 8\,(v_2 + 60 + 5v_1) = 4$ V

$456 = 41v_1 - 9v_2$ (2)

Solving (1) and (2),

$v_1 =$ **- 10.91 V**, $v_2 =$ **- 100.36 V**

PROPRIETARY MATERIAL. © 2007 The McGraw-Hill Companies, Inc. All rights reserved. No part of this Manual may be displayed, reproduced or distributed in any form or by any means, without the prior written permission of the publisher, or used beyond the limited distribution to teachers and educators permitted by McGraw-Hill for their individual course preparation. If you are a student using this Manual, you are using it without permission.

Chapter 3, Problem 23.

Use nodal analysis to find V_o in the circuit of Fig. 3.72.

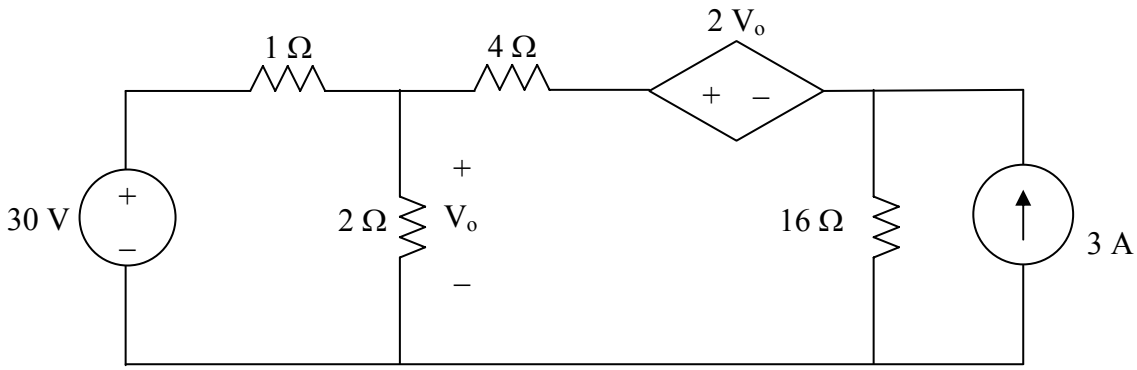

Figure 3.72 For Prob. 3.23.

Chapter 3, Solution 23

We apply nodal analysis to the circuit shown below.

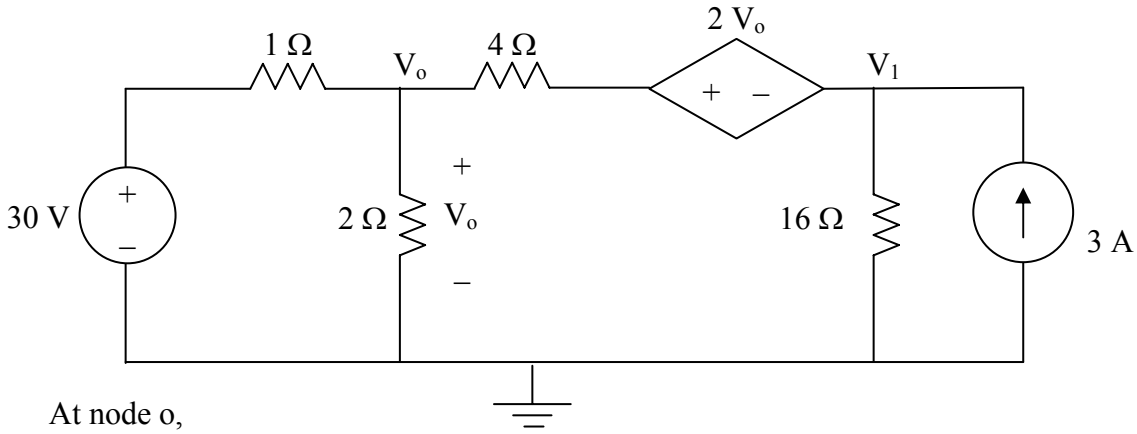

At node o,

$$\frac{V_o - 30}{1} + \frac{V_o - 0}{2} + \frac{V_o - (2V_o + V_1)}{4} = 0 \rightarrow 1.25V_o - 0.25V_1 = 30$$

(1)

At node 1,

$$\frac{(2V_o + V_1) - V_o}{4} + \frac{V_1 - 0}{16} - 3 = 0 \rightarrow 5V_1 + 4V_o = 48 \qquad (2)$$

From (1), $V_1 = 5V_o - 120$. Substituting this into (2) yields
$29V_o = 648$ or $V_o =$ **22.34 V**.

PROPRIETARY MATERIAL. © 2007 The McGraw-Hill Companies, Inc. All rights reserved. No part of this Manual may be displayed, reproduced or distributed in any form or by any means, without the prior written permission of the publisher, or used beyond the limited distribution to teachers and educators permitted by McGraw-Hill for their individual course preparation. If you are a student using this Manual, you are using it without permission.

Chapter 3, Problem 24.

Use nodal analysis and MATLAB to find V_o in the circuit in Fig. 3.73.

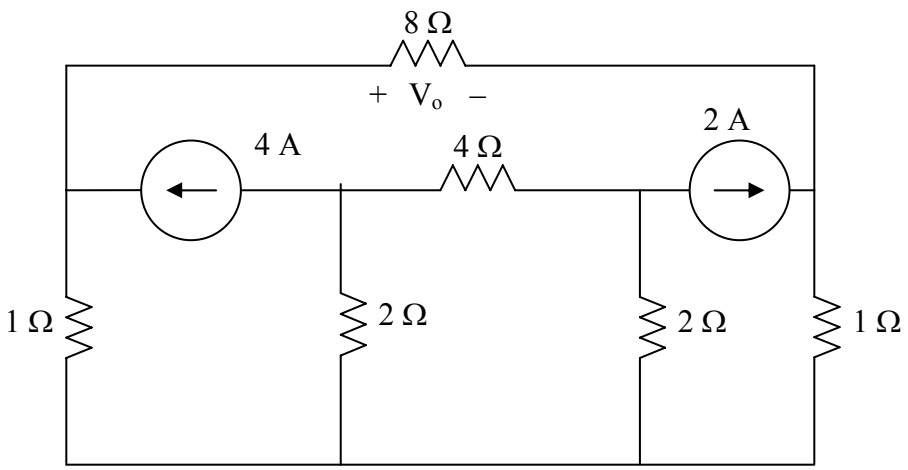

Figure 3.73 For Prob. 3.24.

Chapter 3, Solution 24

Consider the circuit below.

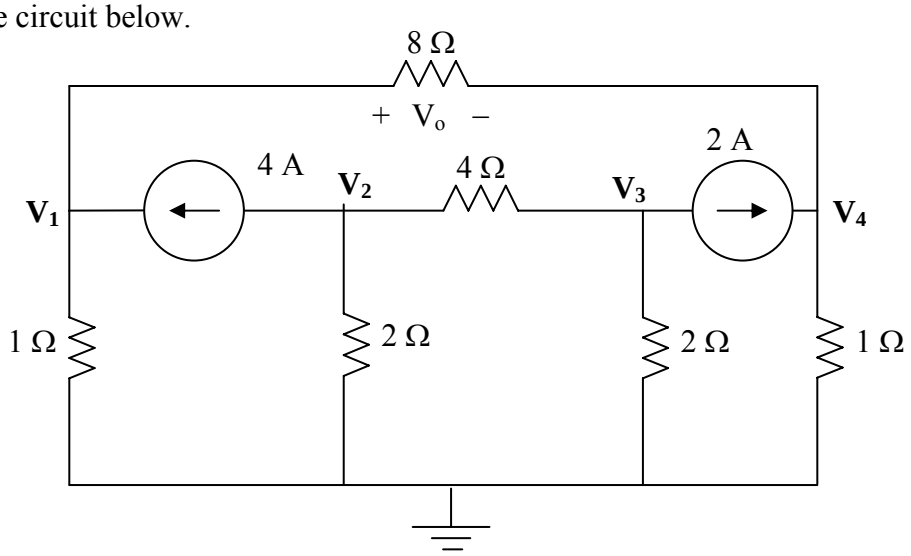

PROPRIETARY MATERIAL. © 2007 The McGraw-Hill Companies, Inc. All rights reserved. No part of this Manual may be displayed, reproduced or distributed in any form or by any means, without the prior written permission of the publisher, or used beyond the limited distribution to teachers and educators permitted by McGraw-Hill for their individual course preparation. If you are a student using this Manual, you are using it without permission.

$$\frac{V_1 - 0}{1} - 4 + \frac{V_1 - V_4}{8} = 0 \rightarrow 1.125V_1 - 0.125V_4 = 4 \qquad (1)$$

$$+4 + \frac{V_2 - 0}{2} + \frac{V_2 - V_3}{4} = 0 \rightarrow 0.75V_2 - 0.25V_3 = -4 \qquad (2)$$

$$\frac{V_3 - V_2}{4} + \frac{V_3 - 0}{2} + 2 = 0 \rightarrow -0.25V_2 + 0.75V_3 = -2 \qquad (3)$$

$$-2 + \frac{V_4 - V_1}{8} + \frac{V_4 - 0}{1} = 0 \rightarrow -0.125V_1 + 1.125V_4 = 2 \qquad (4)$$

$$\begin{bmatrix} 1.125 & 0 & 0 & -0.125 \\ 0 & 0.75 & -0.25 & 0 \\ 0 & -0.25 & 0.75 & 0 \\ -0.125 & 0 & 0 & 1.125 \end{bmatrix} V = \begin{bmatrix} 4 \\ -4 \\ -2 \\ 2 \end{bmatrix}$$

Now we can use MATLAB to solve for the unknown node voltages.

```
>> Y=[1.125,0,0,-0.125;0,0.75,-0.25,0;0,-0.25,0.75,0;-0.125,0,0,1.125]

Y =
    1.1250         0         0   -0.1250
         0    0.7500   -0.2500         0
         0   -0.2500    0.7500         0
   -0.1250         0         0    1.1250

>> I=[4,-4,-2,2]'

I =
     4
    -4
    -2
     2

>> V=inv(Y)*I

V =
    3.8000
   -7.0000
   -5.0000
    2.2000
```

$V_o = V_1 - V_4 = 3.8 - 2.2 =$ **1.6 V**.

PROPRIETARY MATERIAL. © 2007 The McGraw-Hill Companies, Inc. All rights reserved. No part of this Manual may be displayed, reproduced or distributed in any form or by any means, without the prior written permission of the publisher, or used beyond the limited distribution to teachers and educators permitted by McGraw-Hill for their individual course preparation. If you are a student using this Manual, you are using it without permission.

Chapter 3, Problem 25.

Use nodal analysis along with MATLAB to determine the node voltages in Fig. 3.74.

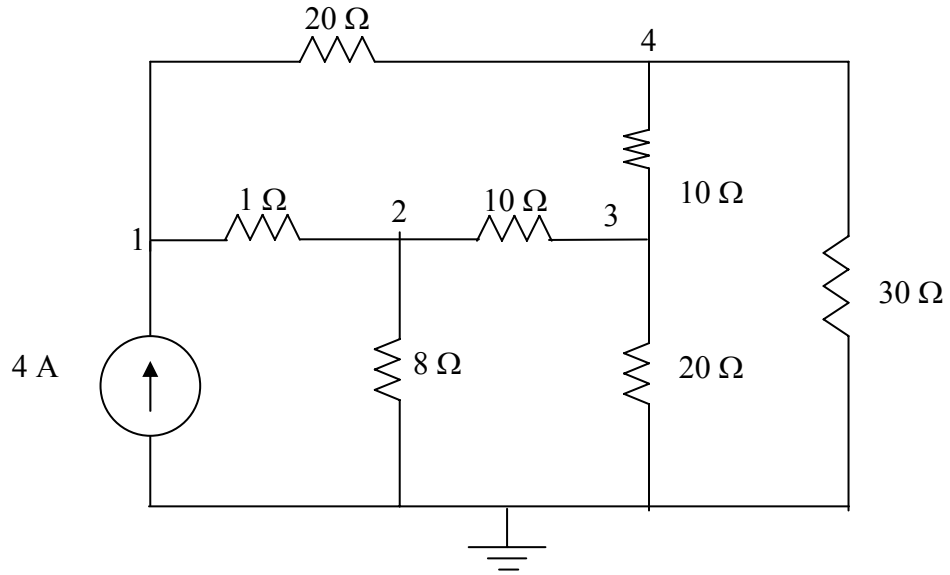

Figure 3.74 For Prob. 3.25.

Chapter 3, Solution 25

Consider the circuit shown below.

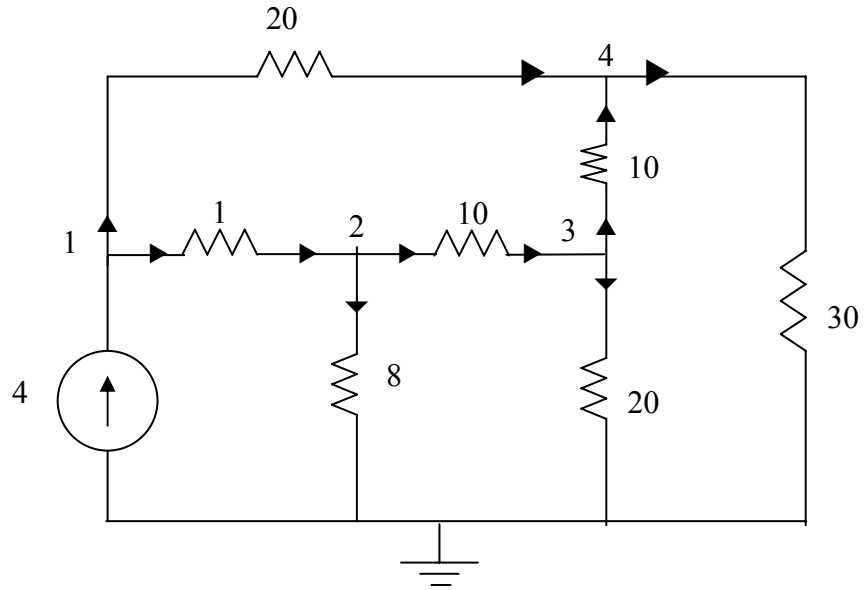

PROPRIETARY MATERIAL. © 2007 The McGraw-Hill Companies, Inc. All rights reserved. No part of this Manual may be displayed, reproduced or distributed in any form or by any means, without the prior written permission of the publisher, or used beyond the limited distribution to teachers and educators permitted by McGraw-Hill for their individual course preparation. If you are a student using this Manual, you are using it without permission.

At node 1.

$$4 = \frac{V_1 - V_2}{1} + \frac{V_1 - V_4}{20} \quad \longrightarrow \quad 80 = 21V_1 - 20V_2 - V_4 \qquad (1)$$

At node 2,

$$\frac{V_1 - V_2}{1} = \frac{V_2}{8} + \frac{V_2 - V_3}{10} \quad \longrightarrow \quad 0 = -80V_1 + 98V_2 - 8V_3 \qquad (2)$$

At node 3,

$$\frac{V_2 - V_3}{10} = \frac{V_3}{20} + \frac{V_3 - V_4}{10} \quad \longrightarrow \quad 0 = -2V_2 + 5V_3 - 2V_4 \qquad (3)$$

At node 4,

$$\frac{V_1 - V_4}{20} + \frac{V_3 - V_4}{10} = \frac{V_4}{30} \quad \longrightarrow \quad 0 = 3V_1 + 6V_3 - 11V_4 \qquad (4)$$

Putting (1) to (4) in matrix form gives:

$$\begin{bmatrix} 80 \\ 0 \\ 0 \\ 0 \end{bmatrix} = \begin{bmatrix} 21 & -20 & 0 & -1 \\ -80 & 98 & -8 & 0 \\ 0 & -2 & 5 & -2 \\ 3 & 0 & 6 & -11 \end{bmatrix} \begin{bmatrix} V_1 \\ V_2 \\ V_3 \\ V_4 \end{bmatrix}$$

$$B = A\ V \quad \longrightarrow \quad V = A^{-1}\ B$$

Using MATLAB leads to

V_1 = **<u>25.52 V</u>**, V_2 = **<u>22.05 V</u>**, V_3 = **<u>14.842 V</u>**, V_4 = **<u>15.055 V</u>**

PROPRIETARY MATERIAL. © 2007 The McGraw-Hill Companies, Inc. All rights reserved. No part of this Manual may be displayed, reproduced or distributed in any form or by any means, without the prior written permission of the publisher, or used beyond the limited distribution to teachers and educators permitted by McGraw-Hill for their individual course preparation. If you are a student using this Manual, you are using it without permission.

Chapter 3, Problem 26.

Calculate the node voltages v_1, v_2, and v_3 in the circuit of Fig. 3.75.

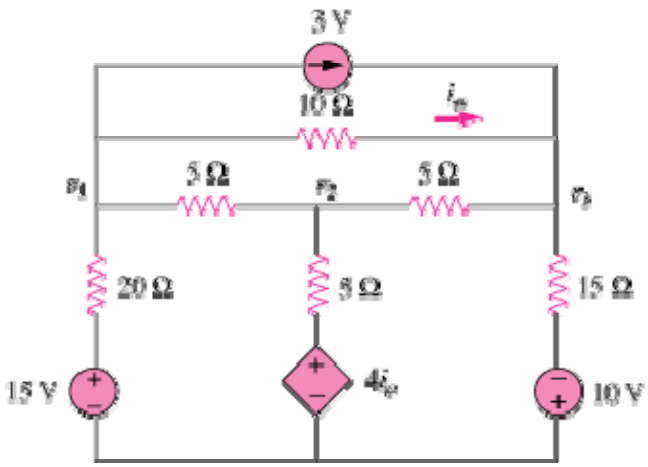

Figure 3.75

PROPRIETARY MATERIAL. © 2007 The McGraw-Hill Companies, Inc. All rights reserved. No part of this Manual may be displayed, reproduced or distributed in any form or by any means, without the prior written permission of the publisher, or used beyond the limited distribution to teachers and educators permitted by McGraw-Hill for their individual course preparation. If you are a student using this Manual, you are using it without permission.

Chapter 3, Solution 26

At node 1,

$$\frac{15-V_1}{20} = 3 + \frac{V_1 - V_3}{10} + \frac{V_1 - V_2}{5} \quad \longrightarrow \quad -45 = 7V_1 - 4V_2 - 2V_3 \qquad (1)$$

At node 2,

$$\frac{V_1 - V_2}{5} + \frac{4I_o - V_2}{5} = \frac{V_2 - V_3}{5} \qquad (2)$$

But $I_o = \dfrac{V_1 - V_3}{10}$. Hence, (2) becomes

$$0 = 7V_1 - 15V_2 + 3V_3 \qquad (3)$$

At node 3,

$$3 + \frac{V_1 - V_3}{10} + \frac{-10 - V_3}{15} + \frac{V_2 - V_3}{5} = 0 \quad \longrightarrow \quad 70 = -3V_1 - 6V_2 + 11V_3 \qquad (4)$$

Putting (1), (3), and (4) in matrix form produces

$$\begin{pmatrix} 7 & -4 & -2 \\ 7 & -15 & 3 \\ -3 & -6 & 11 \end{pmatrix} \begin{pmatrix} V_1 \\ V_2 \\ V_3 \end{pmatrix} = \begin{pmatrix} -45 \\ 0 \\ 70 \end{pmatrix} \quad \longrightarrow \quad AV = B$$

Using MATLAB leads to

$$V = A^{-1}B = \begin{pmatrix} -7.19 \\ -2.78 \\ 2.89 \end{pmatrix}$$

Thus,

V_1 = **<u>–7.19V</u>**; V_2 = **<u>–2.78V</u>**; V_3 = **<u>2.89V</u>**.

PROPRIETARY MATERIAL. © 2007 The McGraw-Hill Companies, Inc. All rights reserved. No part of this Manual may be displayed, reproduced or distributed in any form or by any means, without the prior written permission of the publisher, or used beyond the limited distribution to teachers and educators permitted by McGraw-Hill for their individual course preparation. If you are a student using this Manual, you are using it without permission.

Chapter 3, Problem 27.

Use nodal analysis to determine voltages v_1, v_2, and v_3 in the circuit in Fig. 3.76.

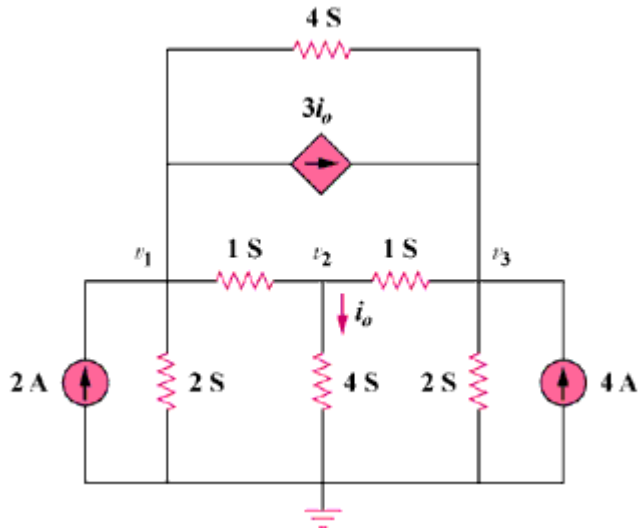

Figure 3.76

PROPRIETARY MATERIAL. © 2007 The McGraw-Hill Companies, Inc. All rights reserved. No part of this Manual may be displayed, reproduced or distributed in any form or by any means, without the prior written permission of the publisher, or used beyond the limited distribution to teachers and educators permitted by McGraw-Hill for their individual course preparation. If you are a student using this Manual, you are using it without permission.

Chapter 3, Solution 27

At node 1,

$$2 = 2v_1 + v_1 - v_2 + (v_1 - v_3)4 + 3i_0, \quad i_0 = 4v_2. \text{ Hence,}$$

$$2 = 7v_1 + 11v_2 - 4v_3 \qquad (1)$$

At node 2,

$$v_1 - v_2 = 4v_2 + v_2 - v_3 \longrightarrow 0 = -v_1 + 6v_2 - v_3 \qquad (2)$$

At node 3,

$$2v_3 = 4 + v_2 - v_3 + 12v_2 + 4(v_1 - v_3)$$

or

$$-4 = 4v_1 + 13v_2 - 7v_3 \qquad (3)$$

In matrix form,

$$\begin{bmatrix} 7 & 11 & -4 \\ 1 & -6 & 1 \\ 4 & 13 & -7 \end{bmatrix} \begin{bmatrix} v_1 \\ v_2 \\ v_3 \end{bmatrix} = \begin{bmatrix} 2 \\ 0 \\ -4 \end{bmatrix}$$

$$\Delta = \begin{vmatrix} 7 & 11 & -4 \\ 1 & -6 & 1 \\ 4 & 13 & -7 \end{vmatrix} = 176, \quad \Delta_1 = \begin{vmatrix} 2 & 11 & -4 \\ 0 & -6 & 1 \\ -4 & 13 & -7 \end{vmatrix} = 110$$

$$\Delta_2 = \begin{vmatrix} 7 & 2 & -4 \\ 1 & 0 & 1 \\ 4 & -4 & -7 \end{vmatrix} = 66, \quad \Delta_3 = \begin{vmatrix} 7 & 11 & 2 \\ 1 & -6 & 0 \\ 4 & 13 & -4 \end{vmatrix} = 286$$

$$v_1 = \frac{\Delta_1}{\Delta} = \frac{110}{176} = 0.625\text{V}, \quad v_2 = \frac{\Delta_2}{\Delta} = \frac{66}{176} = 0.375\text{V}$$

$$v_3 = \frac{\Delta_3}{\Delta} = \frac{286}{176} = 1.625\text{V}.$$

$$v_1 = \underline{\mathbf{625\ mV}}, \quad v_2 = \underline{\mathbf{375\ mV}}, \quad v_3 = \underline{\mathbf{1.625\ V}}.$$

PROPRIETARY MATERIAL. © 2007 The McGraw-Hill Companies, Inc. All rights reserved. No part of this Manual may be displayed, reproduced or distributed in any form or by any means, without the prior written permission of the publisher, or used beyond the limited distribution to teachers and educators permitted by McGraw-Hill for their individual course preparation. If you are a student using this Manual, you are using it without permission.

Chapter 3, Problem 28.

Use *MATLAB* to find the voltages at nodes *a*, *b*, *c*, and *d* in the circuit of Fig. 3.77.

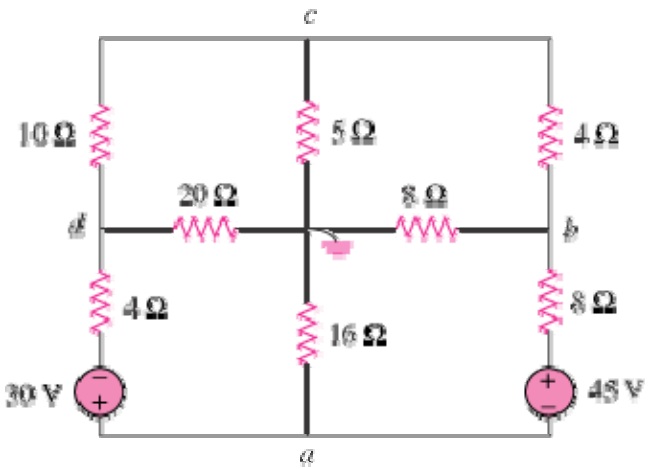

Figure 3.77

PROPRIETARY MATERIAL. © 2007 The McGraw-Hill Companies, Inc. All rights reserved. No part of this Manual may be displayed, reproduced or distributed in any form or by any means, without the prior written permission of the publisher, or used beyond the limited distribution to teachers and educators permitted by McGraw-Hill for their individual course preparation. If you are a student using this Manual, you are using it without permission.

Chapter 3, Solution 28

At node c,

$$\frac{V_d - V_c}{10} = \frac{V_c - V_b}{4} + \frac{V_c}{5} \quad \longrightarrow \quad 0 = -5V_b + 11V_c - 2V_d \qquad (1)$$

At node b,

$$\frac{V_a + 45 - V_b}{8} + \frac{V_c - V_b}{4} = \frac{V_b}{8} \quad \longrightarrow \quad -45 = V_a - 4V_b + 2V_c \qquad (2)$$

At node a,

$$\frac{V_a - 30 - V_d}{4} + \frac{V_a}{16} + \frac{V_a + 45 - V_b}{8} = 0 \quad \longrightarrow \quad 30 = 7V_a - 2V_b - 4V_d \qquad (3)$$

At node d,

$$\frac{V_a - 30 - V_d}{4} = \frac{V_d}{20} + \frac{V_d - V_c}{10} \quad \longrightarrow \quad 150 = 5V_a + 2V_c - 7V_d \qquad (4)$$

In matrix form, (1) to (4) become

$$\begin{pmatrix} 0 & -5 & 11 & -2 \\ 1 & -4 & 2 & 0 \\ 7 & -2 & 0 & -4 \\ 5 & 0 & 2 & -7 \end{pmatrix} \begin{pmatrix} V_a \\ V_b \\ V_c \\ V_d \end{pmatrix} = \begin{pmatrix} 0 \\ -45 \\ 30 \\ 150 \end{pmatrix} \quad \longrightarrow \quad AV = B$$

We use MATLAB to invert A and obtain

$$V = A^{-1}B = \begin{pmatrix} -10.14 \\ 7.847 \\ -1.736 \\ -29.17 \end{pmatrix}$$

Thus,

$$\underline{V_a = -10.14\text{ V},\ V_b = 7.847\text{ V},\ V_c = -1.736\text{ V},\ V_d = -29.17\text{ V}}$$

PROPRIETARY MATERIAL. © 2007 The McGraw-Hill Companies, Inc. All rights reserved. No part of this Manual may be displayed, reproduced or distributed in any form or by any means, without the prior written permission of the publisher, or used beyond the limited distribution to teachers and educators permitted by McGraw-Hill for their individual course preparation. If you are a student using this Manual, you are using it without permission.

Chapter 3, Problem 29.

Use *MATLAB* to solve for the node voltages in the circuit of Fig. 3.78.

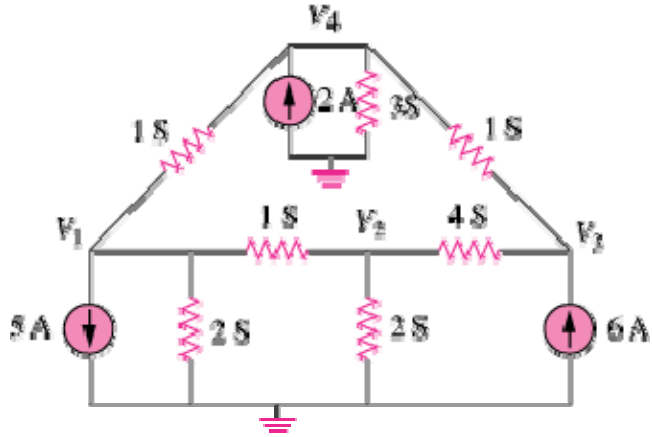

Figure 3.78

Chapter 3, Solution 29

At node 1,

$$5 + V_1 - V_4 + 2V_1 + V_1 - V_2 = 0 \quad \longrightarrow \quad -5 = 4V_1 - V_2 - V_4 \qquad (1)$$

At node 2,

$$V_1 - V_2 = 2V_2 + 4(V_2 - V_3) = 0 \quad \longrightarrow \quad 0 = -V_1 + 7V_2 - 4V_3 \qquad (2)$$

At node 3,

$$6 + 4(V_2 - V_3) = V_3 - V_4 \quad \longrightarrow \quad 6 = -4V_2 + 5V_3 - V_4 \qquad (3)$$

At node 4,

$$2 + V_3 - V_4 + V_1 - V_4 = 3V_4 \quad \longrightarrow \quad 2 = -V_1 - V_3 + 5V_4 \qquad (4)$$

In matrix form, (1) to (4) become

$$\begin{pmatrix} 4 & -1 & 0 & -1 \\ -1 & 7 & -4 & 0 \\ 0 & -4 & 5 & -1 \\ -1 & 0 & -1 & 5 \end{pmatrix} \begin{pmatrix} V_1 \\ V_2 \\ V_3 \\ V_4 \end{pmatrix} = \begin{pmatrix} -5 \\ 0 \\ 6 \\ 2 \end{pmatrix} \quad \longrightarrow \quad AV = B$$

Using MATLAB,

$$V = A^{-1}B = \begin{pmatrix} -0.7708 \\ 1.209 \\ 2.309 \\ 0.7076 \end{pmatrix}$$

i.e.

PROPRIETARY MATERIAL. © 2007 The McGraw-Hill Companies, Inc. All rights reserved. No part of this Manual may be displayed, reproduced or distributed in any form or by any means, without the prior written permission of the publisher, or used beyond the limited distribution to teachers and educators permitted by McGraw-Hill for their individual course preparation. If you are a student using this Manual, you are using it without permission.

$V_1 = -0.7708\text{ V},\ V_2 = 1.209\text{ V},\ V_3 = 2.309\text{ V},\ V_4 = 0.7076\text{ V}$

Chapter 3, Problem 30.

Using nodal analysis, find $\boldsymbol{v_o}$ and $\boldsymbol{i_o}$ in the circuit of Fig. 3.79.

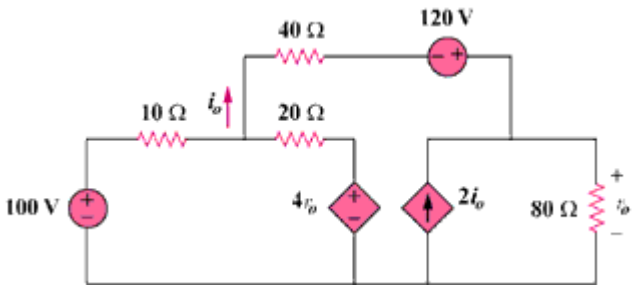

Figure 3.79

Chapter 3, Solution 30

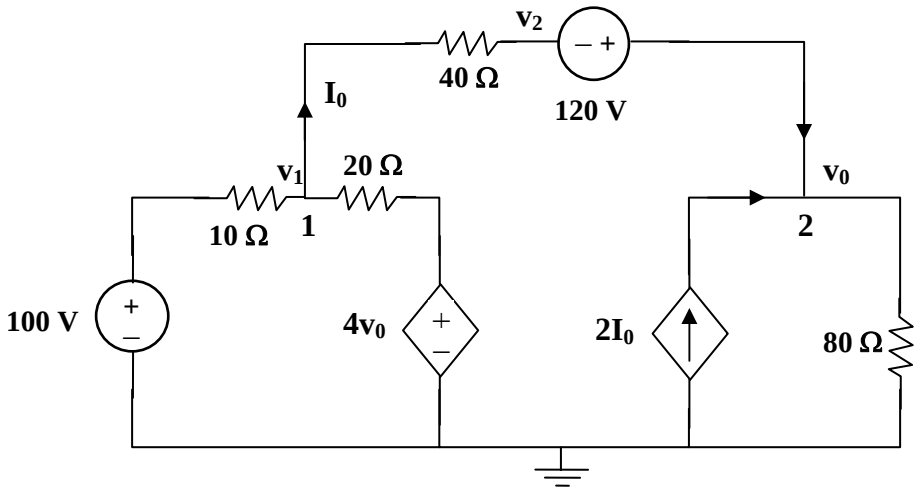

PROPRIETARY MATERIAL. © 2007 The McGraw-Hill Companies, Inc. All rights reserved. No part of this Manual may be displayed, reproduced or distributed in any form or by any means, without the prior written permission of the publisher, or used beyond the limited distribution to teachers and educators permitted by McGraw-Hill for their individual course preparation. If you are a student using this Manual, you are using it without permission.

At node 1,

$$\frac{v_1 - v_2}{40} = \frac{100 - v_1}{10} + \frac{4v_o - v_1}{20} \qquad (1)$$

But, $v_o = 120 + v_2 \longrightarrow v_2 = v_o - 120$. Hence (1) becomes

$$7v_1 - 9v_o = 280 \qquad (2)$$

At node 2,

$$I_o + 2I_o = \frac{v_o - 0}{80}$$

$$3\left(\frac{v_1 + 120 - v_o}{40}\right) = \frac{v_o}{80}$$

or

$$6v_1 - 7v_o = -720 \qquad (3)$$

from (2) and (3),

$$\begin{bmatrix} 7 & -9 \\ 6 & -7 \end{bmatrix}\begin{bmatrix} v_1 \\ v_o \end{bmatrix} = \begin{bmatrix} 280 \\ -720 \end{bmatrix}$$

$$\Delta = \begin{vmatrix} 7 & -9 \\ 6 & -7 \end{vmatrix} = -49 + 54 = 5$$

$$\Delta_1 = \begin{vmatrix} 280 & -9 \\ -720 & -7 \end{vmatrix} = -8440, \quad \Delta_2 = \begin{vmatrix} 7 & 280 \\ 6 & -720 \end{vmatrix} = -6720$$

$$v_1 = \frac{\Delta_1}{\Delta} = \frac{-8440}{5} = -1688, \quad v_o = \frac{\Delta_2}{\Delta} = \frac{-6720}{5} - 1344\text{V}$$

$$I_o = \underline{\mathbf{-5.6\ A}}$$

PROPRIETARY MATERIAL. © 2007 The McGraw-Hill Companies, Inc. All rights reserved. No part of this Manual may be displayed, reproduced or distributed in any form or by any means, without the prior written permission of the publisher, or used beyond the limited distribution to teachers and educators permitted by McGraw-Hill for their individual course preparation. If you are a student using this Manual, you are using it without permission.

Chapter 3, Problem 31.

Find the node voltages for the circuit in Fig. 3.80.

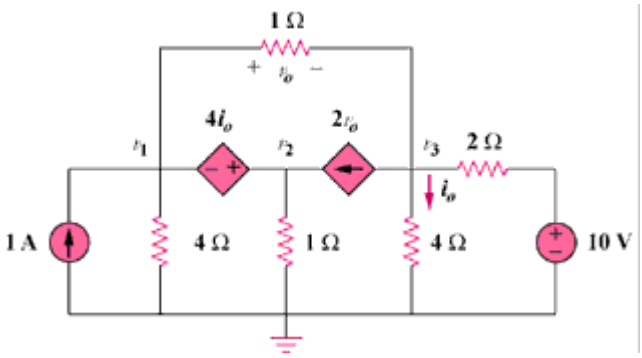

Figure 3.80

Chapter 3, Solution 31

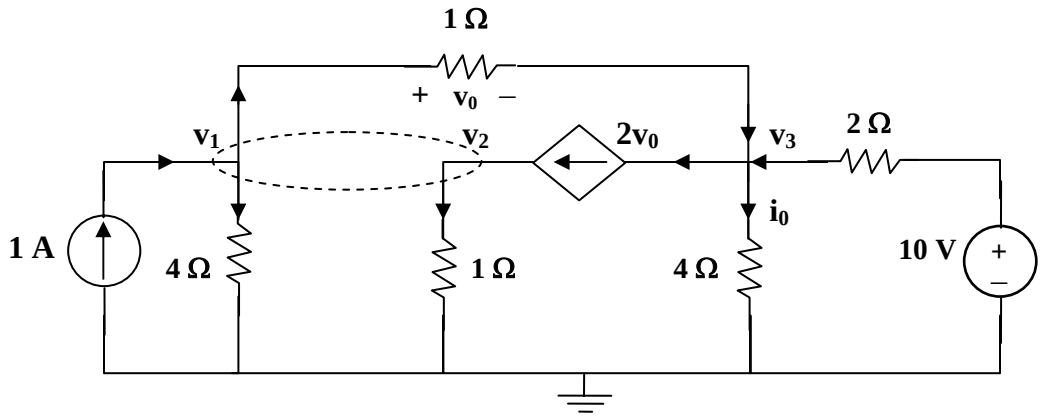

PROPRIETARY MATERIAL. © 2007 The McGraw-Hill Companies, Inc. All rights reserved. No part of this Manual may be displayed, reproduced or distributed in any form or by any means, without the prior written permission of the publisher, or used beyond the limited distribution to teachers and educators permitted by McGraw-Hill for their individual course preparation. If you are a student using this Manual, you are using it without permission.

At the supernode,

$$1 + 2v_0 = \frac{v_1}{4} + \frac{v_2}{1} + \frac{v_1 - v_3}{1} \qquad (1)$$

But $v_o = v_1 - v_3$. Hence (1) becomes,

$$4 = -3v_1 + 4v_2 + 4v_3 \qquad (2)$$

At node 3,

$$2v_o + \frac{v_3}{4} = v_1 - v_3 + \frac{10 - v_3}{2}$$

or

$$20 = 4v_1 + 0v_2 - v_3 \qquad (3)$$

At the supernode, $v_2 = v_1 + 4i_o$. But $i_o = \frac{v_3}{4}$. Hence,

$$v_2 = v_1 + v_3 \qquad (4)$$

Solving (2) to (4) leads to,

v_1 = **4.97V**, v_2 = **4.85V**, v_3 = **–0.12V**.

PROPRIETARY MATERIAL. © 2007 The McGraw-Hill Companies, Inc. All rights reserved. No part of this Manual may be displayed, reproduced or distributed in any form or by any means, without the prior written permission of the publisher, or used beyond the limited distribution to teachers and educators permitted by McGraw-Hill for their individual course preparation. If you are a student using this Manual, you are using it without permission.

Chapter 3, Problem 32.

Obtain the node voltages v_1, v_2, and v_3 in the circuit of Fig. 3.81.

Figure 3.81

Chapter 3, Solution 32

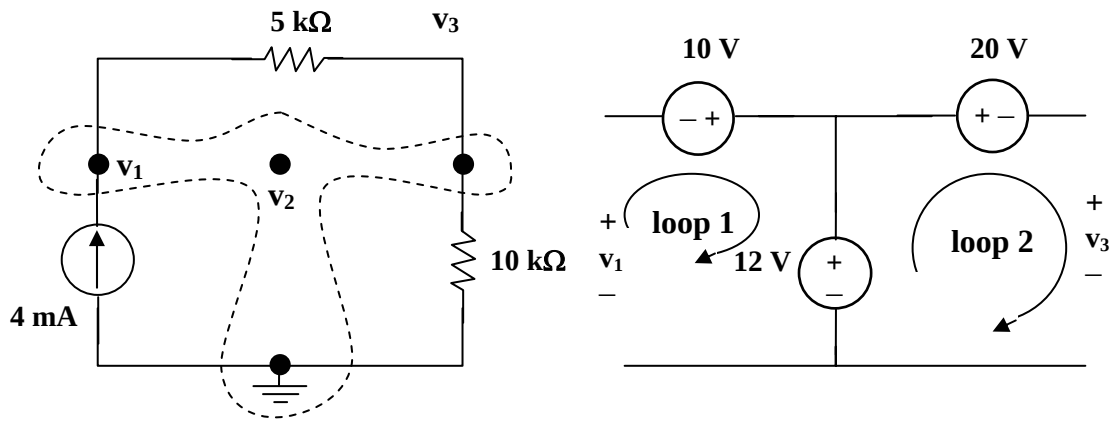

(a) (b)

We have a supernode as shown in figure (a). It is evident that $v_2 = 12$ V, Applying KVL to loops 1and 2 in figure (b), we obtain,

$$-v_1 - 10 + 12 = 0 \text{ or } v_1 = 2 \text{ and } -12 + 20 + v_3 = 0 \text{ or } v_3 = -8 \text{ V}$$

Thus, $v_1 = \underline{\mathbf{2\ V}}$, $v_2 = \underline{\mathbf{12\ V}}$, $v_3 = \underline{\mathbf{-8V}}$.

PROPRIETARY MATERIAL. © 2007 The McGraw-Hill Companies, Inc. All rights reserved. No part of this Manual may be displayed, reproduced or distributed in any form or by any means, without the prior written permission of the publisher, or used beyond the limited distribution to teachers and educators permitted by McGraw-Hill for their individual course preparation. If you are a student using this Manual, you are using it without permission.

Chapter 3, Problem 33.

Which of the circuits in Fig. 3.82 is planar? For the planar circuit, redraw the circuits with no crossing branches.

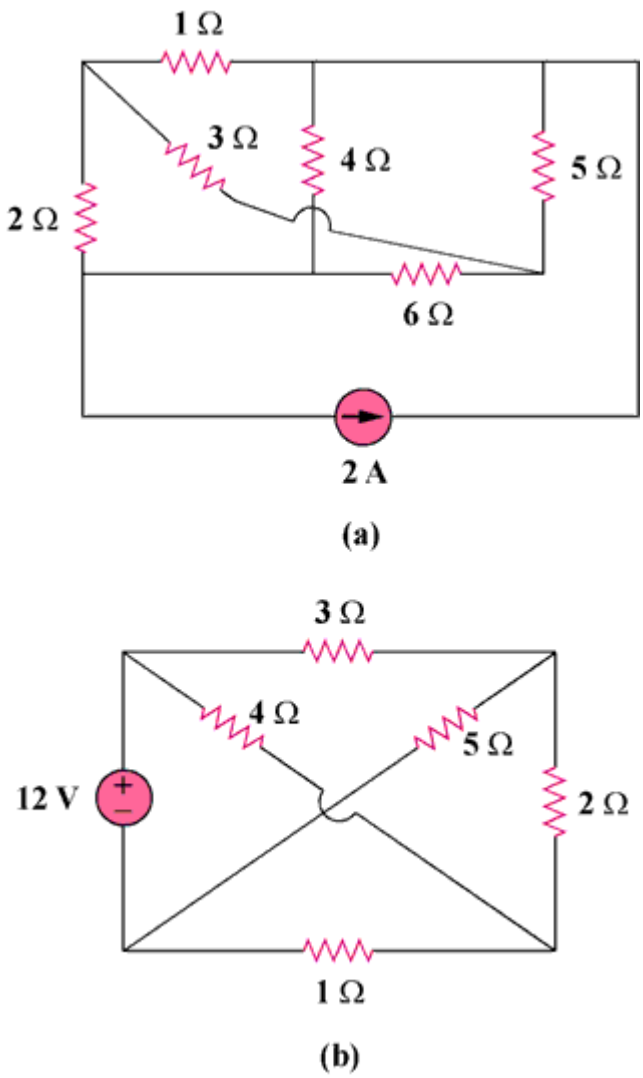

Figure 3.82

PROPRIETARY MATERIAL. © 2007 The McGraw-Hill Companies, Inc. All rights reserved. No part of this Manual may be displayed, reproduced or distributed in any form or by any means, without the prior written permission of the publisher, or used beyond the limited distribution to teachers and educators permitted by McGraw-Hill for their individual course preparation. If you are a student using this Manual, you are using it without permission.

Chapter 3, Solution 33

(a) This is a **planar** circuit. It can be redrawn as shown below.

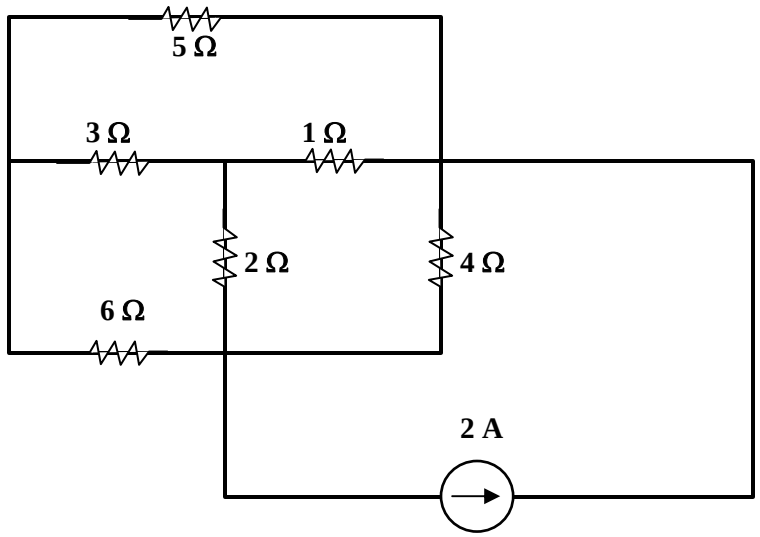

(b) This is a **planar** circuit. It can be redrawn as shown below.

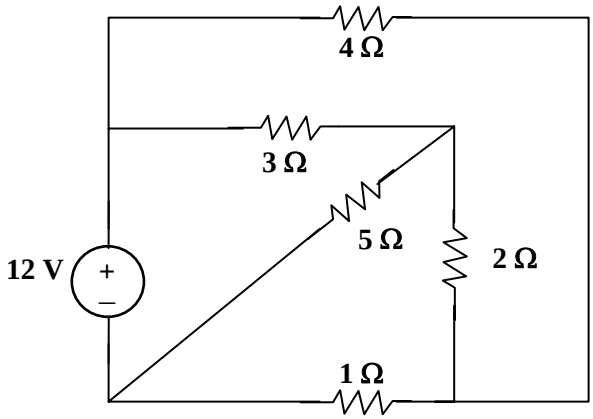

PROPRIETARY MATERIAL. © 2007 The McGraw-Hill Companies, Inc. All rights reserved. No part of this Manual may be displayed, reproduced or distributed in any form or by any means, without the prior written permission of the publisher, or used beyond the limited distribution to teachers and educators permitted by McGraw-Hill for their individual course preparation. If you are a student using this Manual, you are using it without permission.

Chapter 3, Problem 34.

Determine which of the circuits in Fig. 3.83 is planar and redraw it with no crossing branches.

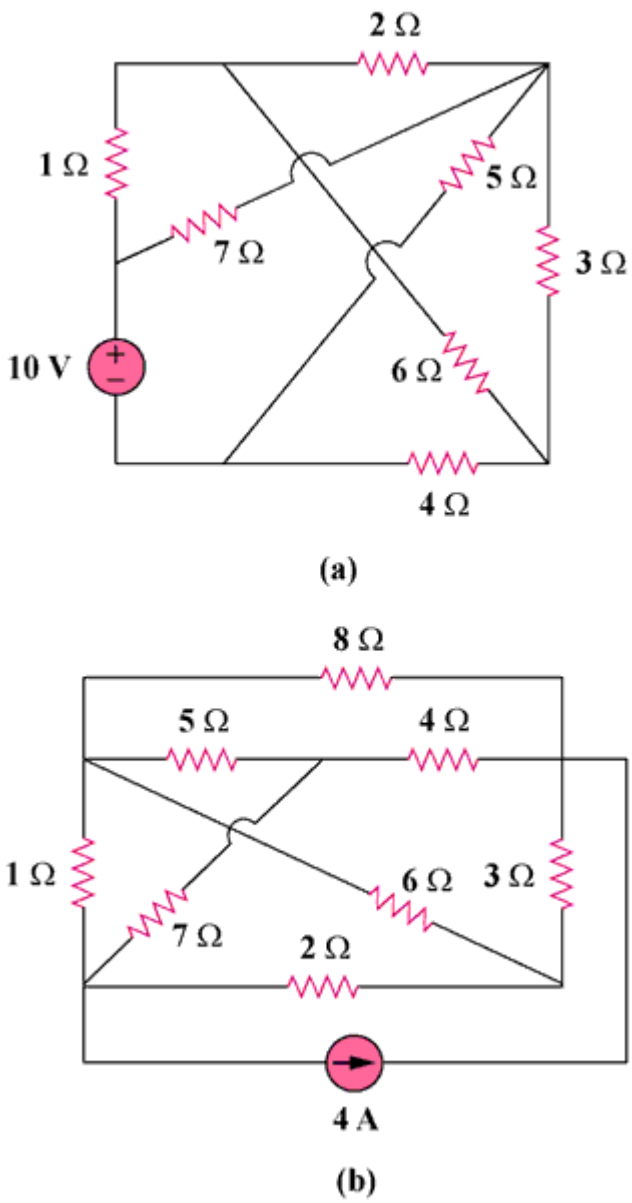

Figure 3.83

PROPRIETARY MATERIAL. © 2007 The McGraw-Hill Companies, Inc. All rights reserved. No part of this Manual may be displayed, reproduced or distributed in any form or by any means, without the prior written permission of the publisher, or used beyond the limited distribution to teachers and educators permitted by McGraw-Hill for their individual course preparation. If you are a student using this Manual, you are using it without permission.

Chapter 3, Solution 34

(a) This is a **planar** circuit because it can be redrawn as shown below,

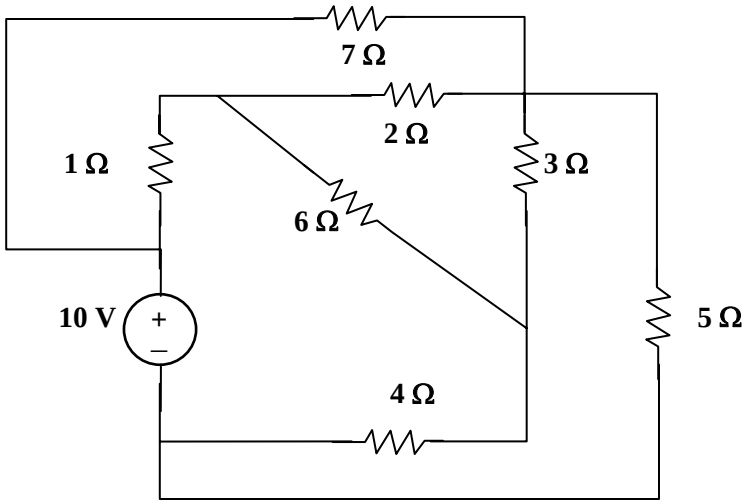

(b) This is a **non-planar** circuit.

PROPRIETARY MATERIAL. © 2007 The McGraw-Hill Companies, Inc. All rights reserved. No part of this Manual may be displayed, reproduced or distributed in any form or by any means, without the prior written permission of the publisher, or used beyond the limited distribution to teachers and educators permitted by McGraw-Hill for their individual course preparation. If you are a student using this Manual, you are using it without permission.

Chapter 3, Problem 35.

Rework Prob. 3.5 using mesh analysis.

Chapter 3, Problem 5

Obtain v_0 in the circuit of Fig. 3.54.

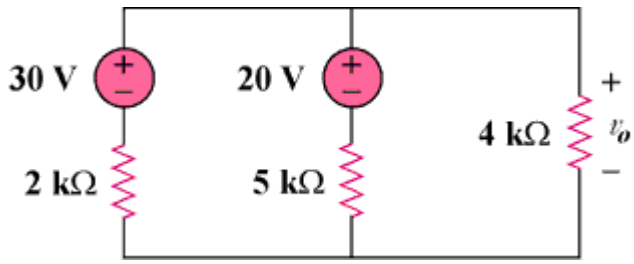

Figure 3.54

Chapter 3, Solution 35

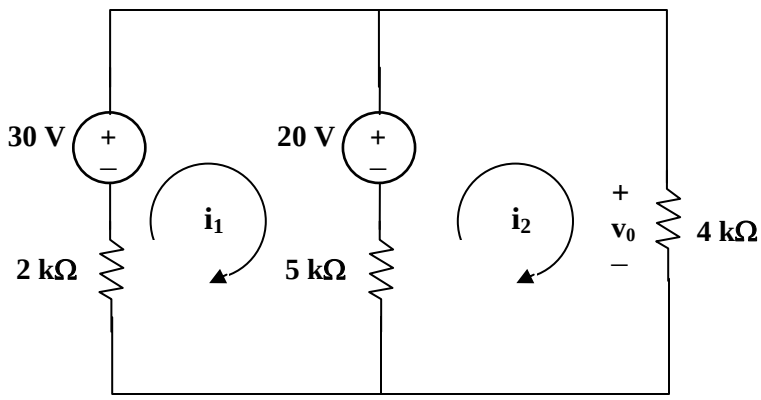

Assume that i_1 and i_2 are in mA. We apply mesh analysis. For mesh 1,

$$-30 + 20 + 7i_1 - 5i_2 = 0 \quad \text{or} \quad 7i_1 - 5i_2 = 10 \qquad (1)$$

For mesh 2,

$$-20 + 9i_2 - 5i_1 = 0 \quad \text{or} \quad -5i_1 + 9i_2 = 20 \qquad (2)$$

Solving (1) and (2), we obtain, $i_2 = 5$.

$$v_0 = 4i_2 = \underline{\mathbf{20\ volts}}.$$

PROPRIETARY MATERIAL. © 2007 The McGraw-Hill Companies, Inc. All rights reserved. No part of this Manual may be displayed, reproduced or distributed in any form or by any means, without the prior written permission of the publisher, or used beyond the limited distribution to teachers and educators permitted by McGraw-Hill for their individual course preparation. If you are a student using this Manual, you are using it without permission.

Chapter 3, Problem 36.

Rework Prob. 3.6 using mesh analysis.

Chapter 3, Problem 6

Use nodal analysis to obtain v_0 in the circuit in Fig. 3.55.

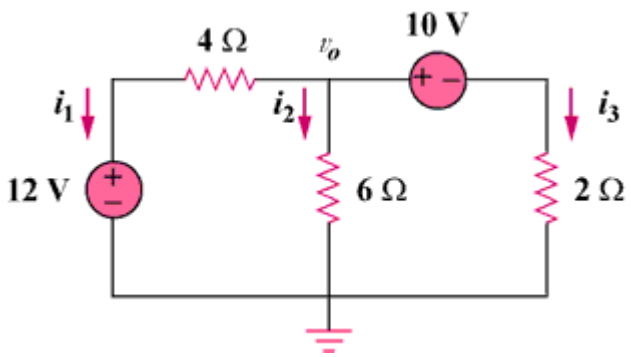

Figure 3.55

PROPRIETARY MATERIAL. © 2007 The McGraw-Hill Companies, Inc. All rights reserved. No part of this Manual may be displayed, reproduced or distributed in any form or by any means, without the prior written permission of the publisher, or used beyond the limited distribution to teachers and educators permitted by McGraw-Hill for their individual course preparation. If you are a student using this Manual, you are using it without permission.

Chapter 3, Solution 36

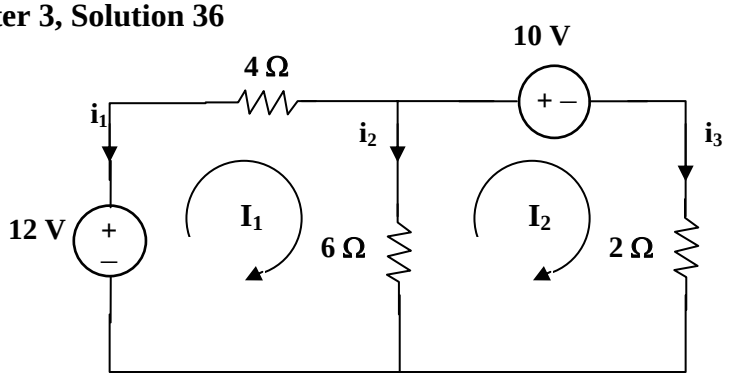

Applying mesh analysis gives,

$$12 = 10I_1 - 6I_2$$

$$-10 = -6I_1 + 8I_2$$

or

$$\begin{bmatrix} 6 \\ -5 \end{bmatrix} = \begin{bmatrix} 5 & -3 \\ -3 & 4 \end{bmatrix} \begin{bmatrix} I_1 \\ I_2 \end{bmatrix}$$

$$\Delta = \begin{vmatrix} 5 & -3 \\ -3 & 4 \end{vmatrix} = 11, \quad \Delta_1 = \begin{vmatrix} 6 & -3 \\ -5 & 4 \end{vmatrix} = 9, \quad \Delta_2 = \begin{vmatrix} 5 & 6 \\ -3 & -5 \end{vmatrix} = -7$$

$$I_1 = \frac{\Delta_1}{\Delta} = \frac{9}{11}, \quad I_2 = \frac{\Delta_2}{\Delta} = \frac{-7}{11}$$

$$i_1 = -I_1 = -9/11 = -0.8181 \text{ A}, \quad i_2 = I_1 - I_2 = 10/11 = 1.4545 \text{ A}.$$

$$v_o = 6i_2 = 6\text{x}1.4545 = \underline{\mathbf{8.727\ V}}.$$

PROPRIETARY MATERIAL. © 2007 The McGraw-Hill Companies, Inc. All rights reserved. No part of this Manual may be displayed, reproduced or distributed in any form or by any means, without the prior written permission of the publisher, or used beyond the limited distribution to teachers and educators permitted by McGraw-Hill for their individual course preparation. If you are a student using this Manual, you are using it without permission.

Chapter 3, Problem 37.

Rework Prob. 3.8 using mesh analysis.

Chapter 3, Problem 8

Using nodal analysis, find v_0 in the circuit in Fig. 3.57.

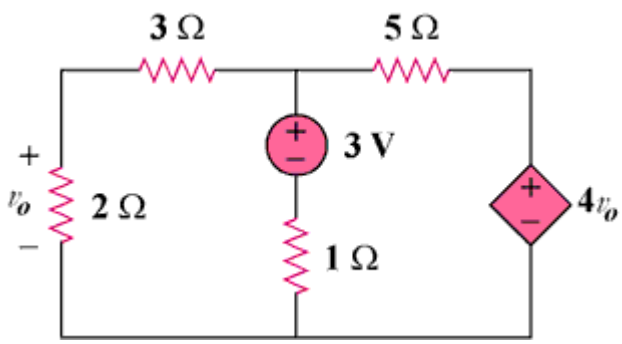

Figure 3.57

Chapter 3, Solution 37

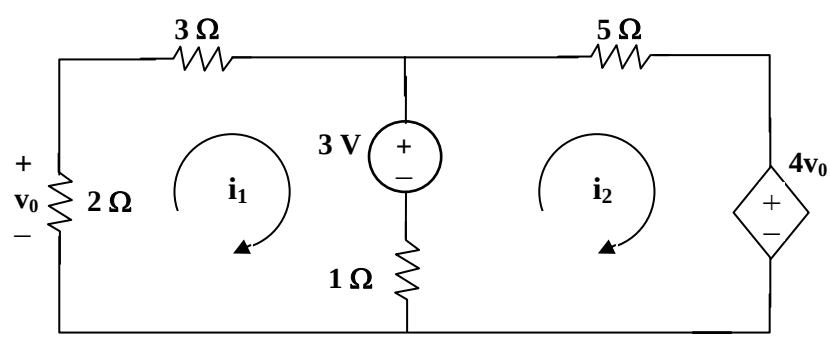

Applying mesh analysis to loops 1 and 2, we get,

$6i_1 - 1i_2 + 3 = 0$ which leads to $i_2 = 6i_1 + 3$ (1)

$-1i_1 + 6i_2 - 3 + 4v_0 = 0$ (2)

But, $v_0 = -2i_1$ (3)

Using (1), (2), and (3) we get $i_1 = -5/9$.

Therefore, we get $v_0 = -2i_1 = -2(-5/9) =$ **1.1111 volts**

PROPRIETARY MATERIAL. © 2007 The McGraw-Hill Companies, Inc. All rights reserved. No part of this Manual may be displayed, reproduced or distributed in any form or by any means, without the prior written permission of the publisher, or used beyond the limited distribution to teachers and educators permitted by McGraw-Hill for their individual course preparation. If you are a student using this Manual, you are using it without permission.

Chapter 3, Problem 38.
Apply mesh analysis to the circuit in Fig. 3.84 and obtain I_o.

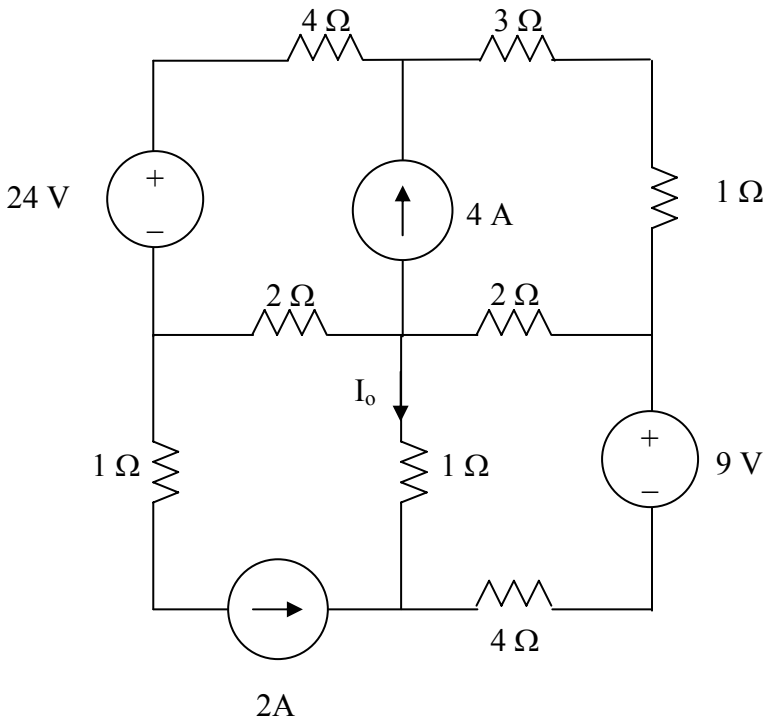

Figure 3.84 For Prob. 3.38.

Chapter 3, Solution 38
Consider the circuit below with the mesh currents.

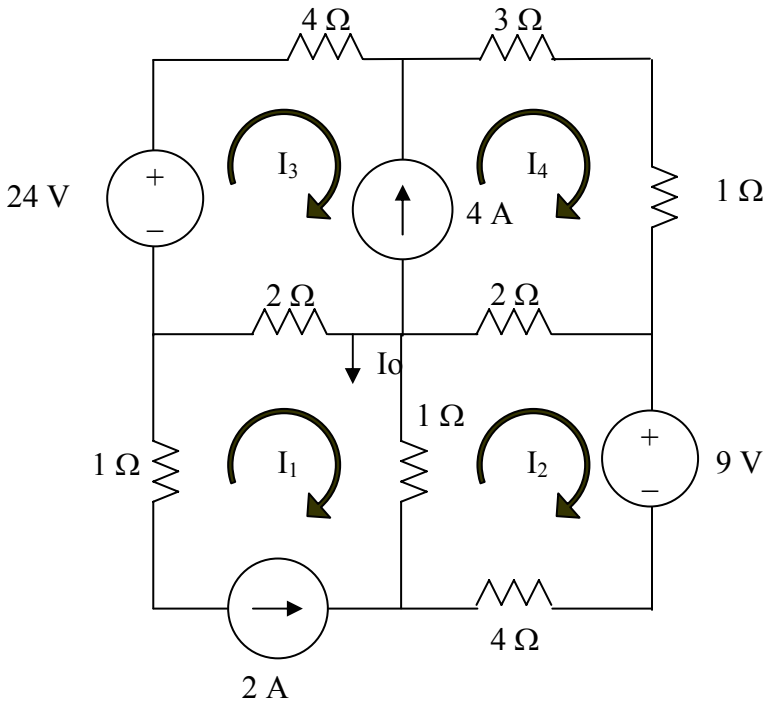

PROPRIETARY MATERIAL. © 2007 The McGraw-Hill Companies, Inc. All rights reserved. No part of this Manual may be displayed, reproduced or distributed in any form or by any means, without the prior written permission of the publisher, or used beyond the limited distribution to teachers and educators permitted by McGraw-Hill for their individual course preparation. If you are a student using this Manual, you are using it without permission.

$I_1 = -2$ A (1)

$1(I_2 - I_1) + 2(I_2 - I_4) + 9 + 4I_2 = 0$
$7I_2 - I_4 = -11$ (2)

$-24 + 4I_3 + 3I_4 + 1I_4 + 2(I_4 - I_2) + 2(I_3 - I_1) = 0$ (super mesh)
$-2I_2 + 6I_3 + 6I_4 = +24 - 4 = 20$ (3)

But, we need one more equation, so we use the constraint equation $-I_3 + I_4 = 4$. This now gives us three equations with three unknowns.

$$\begin{bmatrix} 7 & 0 & -1 \\ -2 & 6 & 6 \\ 0 & -1 & 1 \end{bmatrix} \begin{bmatrix} I_2 \\ I_3 \\ I_4 \end{bmatrix} = \begin{bmatrix} -11 \\ 20 \\ 4 \end{bmatrix}$$

We can now use MATLAB to solve the problem.

```
>> Z=[7,0,-1;-2,6,6;0,-1,0]

Z =

     7     0    -1
    -2     6     6
     0    -1     0
>> V=[-11,20,4]'

V =

   -11
    20
     4
>> I=inv(Z)*V

I =

   -0.5500
   -4.0000
    7.1500
```

$I_o = I_1 - I_2 = -2 - 4 =$ **-6 A**.

Check using the super mesh (equation (3)): $1.1 - 24 + 42.9 = 20$!

PROPRIETARY MATERIAL. © 2007 The McGraw-Hill Companies, Inc. All rights reserved. No part of this Manual may be displayed, reproduced or distributed in any form or by any means, without the prior written permission of the publisher, or used beyond the limited distribution to teachers and educators permitted by McGraw-Hill for their individual course preparation. If you are a student using this Manual, you are using it without permission.

Chapter 3, Problem 39.

Determine the mesh currents i_1 and i_2 in the circuit shown in Fig. 3.85.

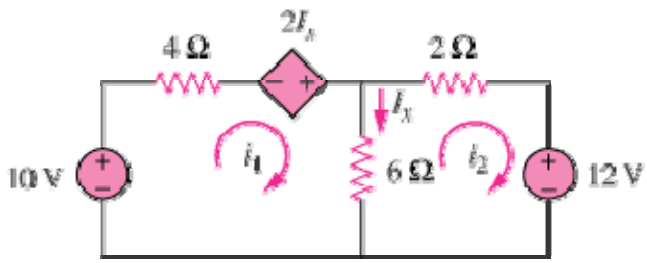

Figure 3.85

Chapter 3, Solution 39

For mesh 1,

$$-10 - 2I_x + 10I_1 - 6I_2 = 0$$

But $I_x = I_1 - I_2$. Hence,

$$10 = -2I_1 + 2I_2 + 10I_1 - 6I_2 \quad \longrightarrow \quad 5 = 4I_1 - 2I_2 \qquad (1)$$

For mesh 2,

$$12 + 8I_2 - 6I_1 = 0 \quad \longrightarrow \quad 6 = 3I_1 - 4I_2 \qquad (2)$$

Solving (1) and (2) leads to

$$\underline{I_1 = 0.8\text{ A},\ \ I_2 = \text{-}0.9\text{A}}$$

PROPRIETARY MATERIAL. © 2007 The McGraw-Hill Companies, Inc. All rights reserved. No part of this Manual may be displayed, reproduced or distributed in any form or by any means, without the prior written permission of the publisher, or used beyond the limited distribution to teachers and educators permitted by McGraw-Hill for their individual course preparation. If you are a student using this Manual, you are using it without permission.

Chapter 3, Problem 40.

For the bridge network in Fig. 3.86, find $\boldsymbol{I_o}$ using mesh analysis.

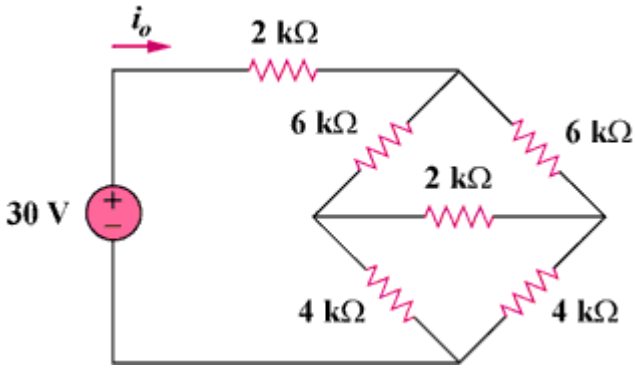

Figure 3.86

Chapter 3, Solution 40

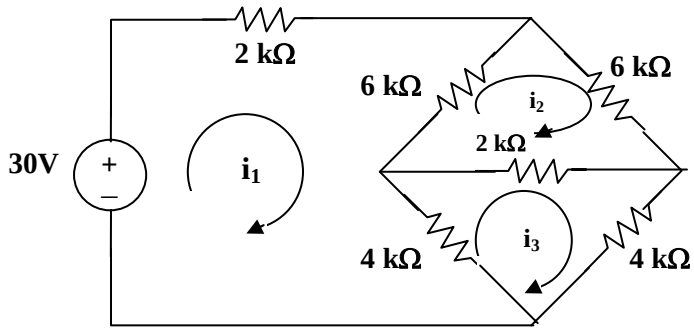

Assume all currents are in mA and apply mesh analysis for mesh 1.

$$30 = 12i_1 - 6i_2 - 4i_3 \longrightarrow 15 = 6i_1 - 3i_2 - 2i_3 \qquad (1)$$

for mesh 2,

$$0 = -6i_1 + 14i_2 - 2i_3 \longrightarrow 0 = -3i_1 + 7i_2 - i_3 \qquad (2)$$

for mesh 2,

$$0 = -4i_1 - 2i_2 + 10i_3 \qquad 0 = -2i_1 - i_2 + 5i_3 \qquad (3)$$

Solving (1), (2), and (3), we obtain,

$$i_o = i_1 = \underline{\mathbf{4.286\ mA}}.$$

PROPRIETARY MATERIAL. © 2007 The McGraw-Hill Companies, Inc. All rights reserved. No part of this Manual may be displayed, reproduced or distributed in any form or by any means, without the prior written permission of the publisher, or used beyond the limited distribution to teachers and educators permitted by McGraw-Hill for their individual course preparation. If you are a student using this Manual, you are using it without permission.

Chapter 3, Problem 41.

Apply mesh analysis to find $\boldsymbol{i_o}$ in Fig. 3.87.

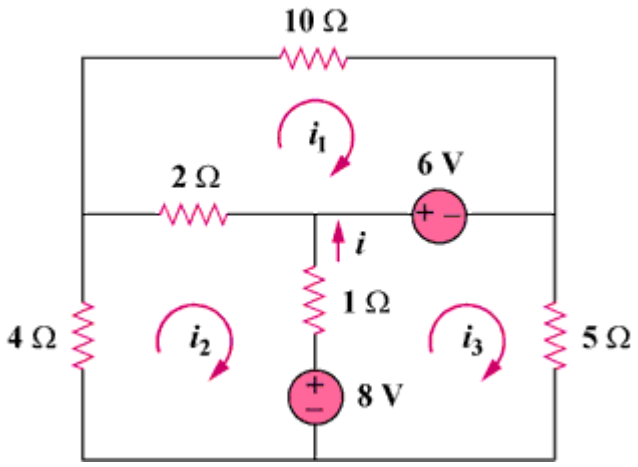

Figure 3.87

PROPRIETARY MATERIAL. © 2007 The McGraw-Hill Companies, Inc. All rights reserved. No part of this Manual may be displayed, reproduced or distributed in any form or by any means, without the prior written permission of the publisher, or used beyond the limited distribution to teachers and educators permitted by McGraw-Hill for their individual course preparation. If you are a student using this Manual, you are using it without permission.

Chapter 3, Solution 41

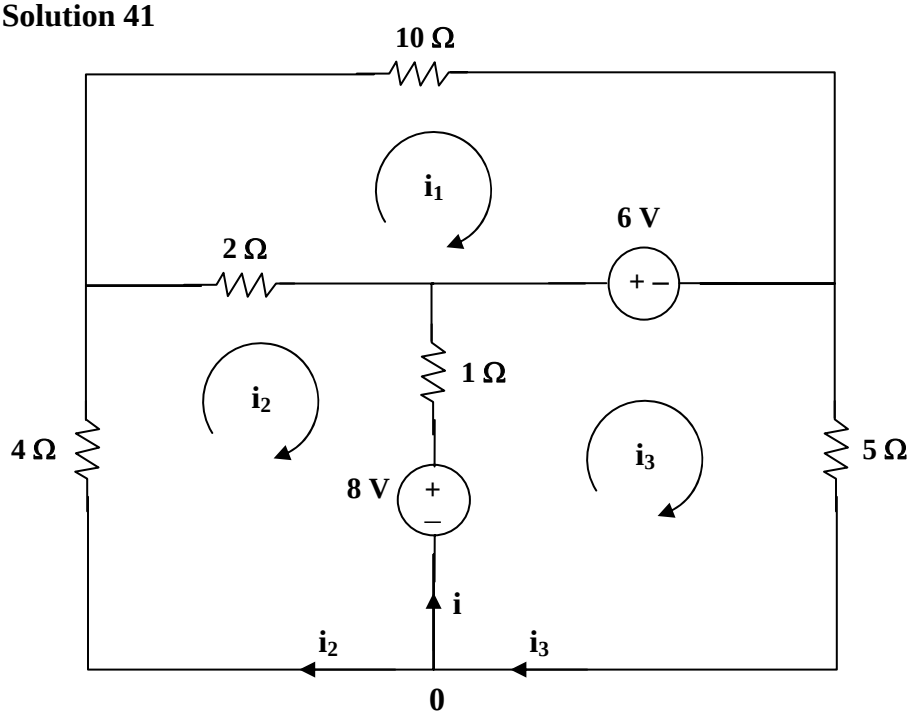

For loop 1,

$$6 = 12i_1 - 2i_2 \longrightarrow 3 = 6i_1 - i_2 \qquad (1)$$

For loop 2,

$$-8 = -2i_1 + 7i_2 - i_3 \qquad (2)$$

For loop 3,

$$-8 + 6 + 6i_3 - i_2 = 0 \longrightarrow 2 = -i_2 + 6i_3 \qquad (3)$$

We put (1), (2), and (3) in matrix form,

$$\begin{bmatrix} 6 & -1 & 0 \\ 2 & -7 & 1 \\ 0 & -1 & 6 \end{bmatrix}\begin{bmatrix} i_1 \\ i_2 \\ i_3 \end{bmatrix} = \begin{bmatrix} 3 \\ 8 \\ 2 \end{bmatrix}$$

$$\Delta = \begin{vmatrix} 6 & -1 & 0 \\ 2 & -7 & 1 \\ 0 & -1 & 6 \end{vmatrix} = -234, \quad \Delta_2 = \begin{vmatrix} 6 & 3 & 0 \\ 2 & 8 & 1 \\ 0 & 2 & 6 \end{vmatrix} = 240$$

$$\Delta_3 = \begin{vmatrix} 6 & -1 & 3 \\ 2 & -7 & 8 \\ 0 & -1 & 2 \end{vmatrix} = -38$$

At node 0, $i + i_2 = i_3$ or $i = i_3 - i_2 = \dfrac{\Delta_3 - \Delta_2}{\Delta} = \dfrac{-38 - 240}{-234} =$ **1.188 A**

PROPRIETARY MATERIAL. © 2007 The McGraw-Hill Companies, Inc. All rights reserved. No part of this Manual may be displayed, reproduced or distributed in any form or by any means, without the prior written permission of the publisher, or used beyond the limited distribution to teachers and educators permitted by McGraw-Hill for their individual course preparation. If you are a student using this Manual, you are using it without permission.

Chapter 3, Problem 42.

Determine the mesh currents in the circuit of Fig. 3.88.

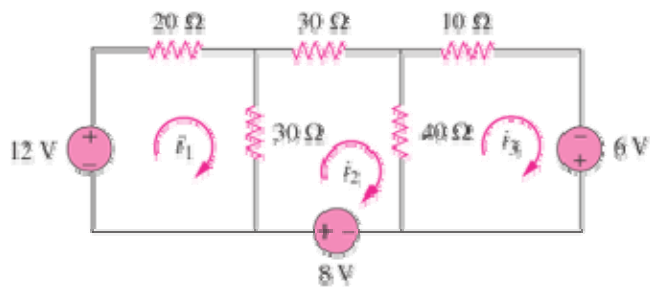

Figure 3.88

Chapter 3, Solution 42

For mesh 1,

$$-12 + 50I_1 - 30I_2 = 0 \quad \longrightarrow \quad 12 = 50I_1 - 30I_2 \qquad (1)$$

For mesh 2,

$$-8 + 100I_2 - 30I_1 - 40I_3 = 0 \quad \longrightarrow \quad 8 = -30I_1 + 100I_2 - 40I_3 \qquad (2)$$

For mesh 3,

$$-6 + 50I_3 - 40I_2 = 0 \quad \longrightarrow \quad 6 = -40I_2 + 50I_3 \qquad (3)$$

Putting eqs. (1) to (3) in matrix form, we get

$$\begin{pmatrix} 50 & -30 & 0 \\ -30 & 100 & -40 \\ 0 & -40 & 50 \end{pmatrix}\begin{pmatrix} I_1 \\ I_2 \\ I_3 \end{pmatrix} = \begin{pmatrix} 12 \\ 8 \\ 6 \end{pmatrix} \quad \longrightarrow \quad AI = B$$

Using Matlab,

$$I = A^{-1}B = \begin{pmatrix} 0.48 \\ 0.40 \\ 0.44 \end{pmatrix}$$

i.e. $I_1 = 0.48$ A, $I_2 = 0.4$ A, $I_3 = 0.44$ A

PROPRIETARY MATERIAL. © 2007 The McGraw-Hill Companies, Inc. All rights reserved. No part of this Manual may be displayed, reproduced or distributed in any form or by any means, without the prior written permission of the publisher, or used beyond the limited distribution to teachers and educators permitted by McGraw-Hill for their individual course preparation. If you are a student using this Manual, you are using it without permission.

Chapter 3, Problem 43.

Use mesh analysis to find v_{ab} and i_o in the circuit in Fig. 3.89.

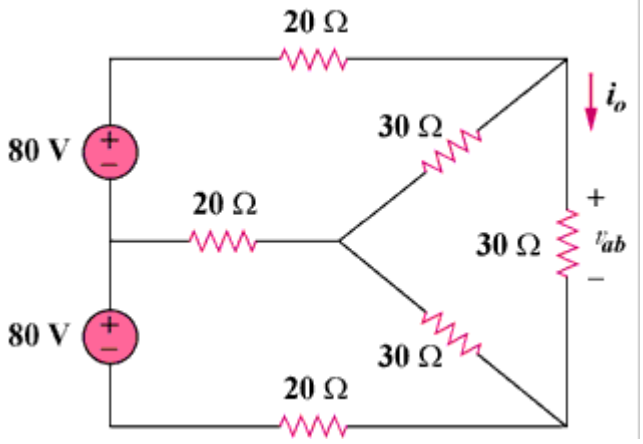

Figure 3.89

Chapter 3, Solution 43

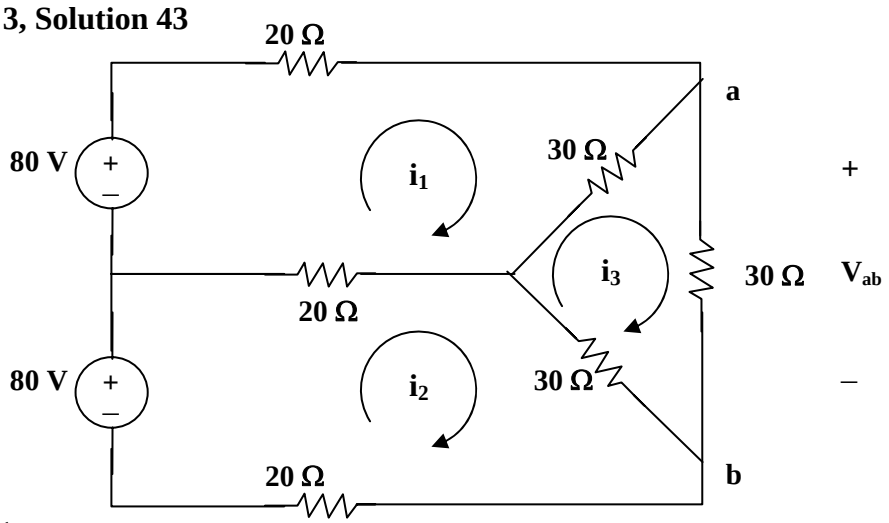

For loop 1,

$$80 = 70i_1 - 20i_2 - 30i_3 \longrightarrow 8 = 7i_1 - 2i_2 - 3i_3 \qquad (1)$$

For loop 2,

$$80 = 70i_2 - 20i_1 - 30i_3 \longrightarrow 8 = -2i_1 + 7i_2 - 3i_3 \qquad (2)$$

For loop 3,

$$0 = -30i_1 - 30i_2 + 90i_3 \longrightarrow 0 = i_1 + i_2 - 3i_3 \qquad (3)$$

Solving (1) to (3), we obtain $i_3 = 16/9$

$$I_o = i_3 = 16/9 = \underline{\mathbf{1.7778\ A}}$$

$$V_{ab} = 30i_3 = \underline{\mathbf{53.33\ V}}.$$

PROPRIETARY MATERIAL. © 2007 The McGraw-Hill Companies, Inc. All rights reserved. No part of this Manual may be displayed, reproduced or distributed in any form or by any means, without the prior written permission of the publisher, or used beyond the limited distribution to teachers and educators permitted by McGraw-Hill for their individual course preparation. If you are a student using this Manual, you are using it without permission.

Chapter 3, Problem 44.

Use mesh analysis to obtain i_o in the circuit of Fig. 3.90.

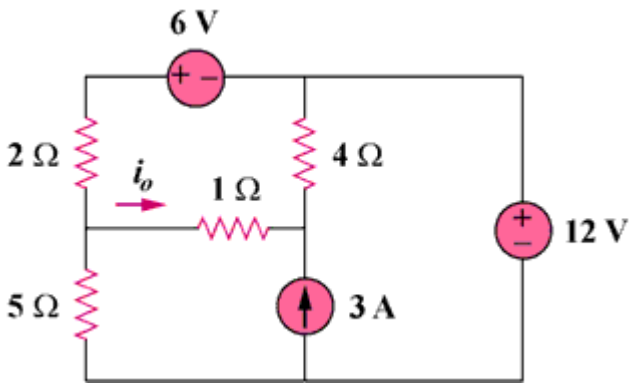

Figure 3.90

Chapter 3, Solution 44

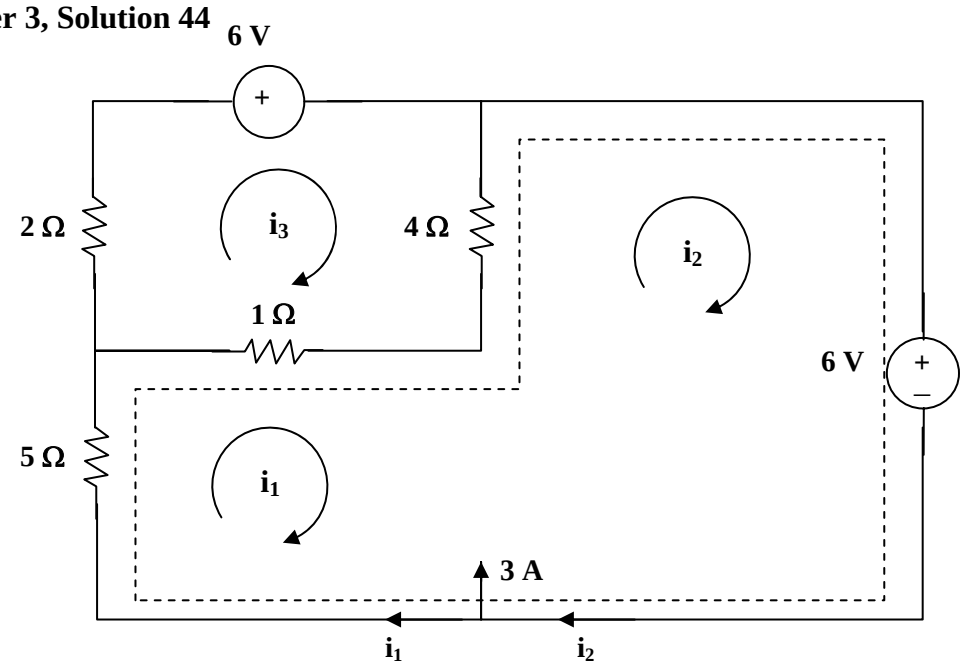

Loop 1 and 2 form a supermesh. For the supermesh,

$$6i_1 + 4i_2 - 5i_3 + 12 = 0 \qquad (1)$$

For loop 3, $$-i_1 - 4i_2 + 7i_3 + 6 = 0 \qquad (2)$$

Also, $$i_2 = 3 + i_1 \qquad (3)$$

Solving (1) to (3), $i_1 = -3.067$, $i_3 = -1.3333$; $i_o = i_1 - i_3 =$ **-1.7333 A**

PROPRIETARY MATERIAL. © 2007 The McGraw-Hill Companies, Inc. All rights reserved. No part of this Manual may be displayed, reproduced or distributed in any form or by any means, without the prior written permission of the publisher, or used beyond the limited distribution to teachers and educators permitted by McGraw-Hill for their individual course preparation. If you are a student using this Manual, you are using it without permission.

Chapter 3, Problem 45.

Find current ***i*** in the circuit in Fig. 3.91.

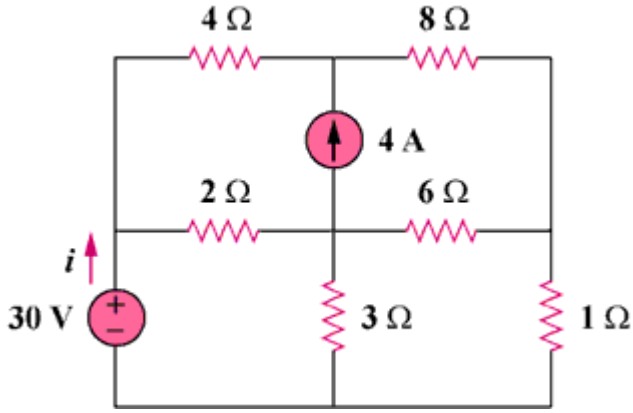

Figure 3.91

Chapter 3, Solution 45

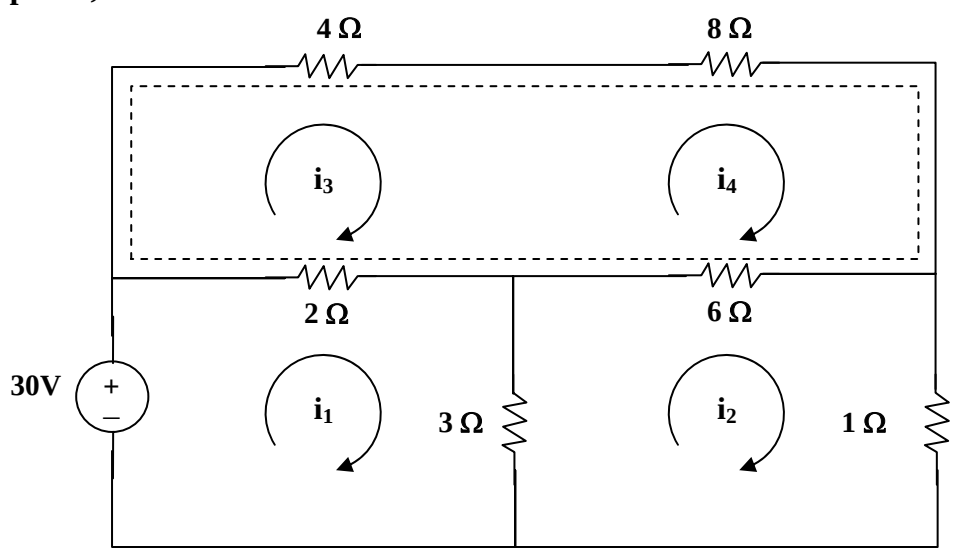

For loop 1, $30 = 5i_1 - 3i_2 - 2i_3$ (1)

For loop 2, $10i_2 - 3i_1 - 6i_4 = 0$ (2)

For the supermesh, $6i_3 + 14i_4 - 2i_1 - 6i_2 = 0$ (3)

But $i_4 - i_3 = 4$ which leads to $i_4 = i_3 + 4$ (4)

Solving (1) to (4) by elimination gives $i = i_1 =$ **8.561 A**.

PROPRIETARY MATERIAL. © 2007 The McGraw-Hill Companies, Inc. All rights reserved. No part of this Manual may be displayed, reproduced or distributed in any form or by any means, without the prior written permission of the publisher, or used beyond the limited distribution to teachers and educators permitted by McGraw-Hill for their individual course preparation. If you are a student using this Manual, you are using it without permission.

Chapter 3, Problem 46.

Calculate the mesh currents i_1 and i_2 in Fig. 3.92.

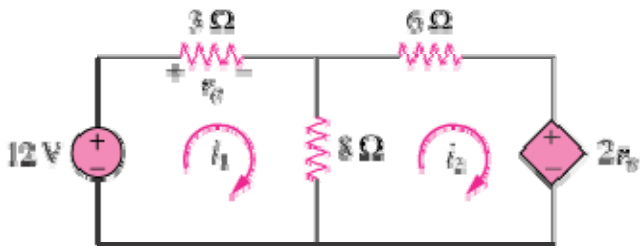

Figure 3.92

Chapter 3, Solution 46

For loop 1,

$$-12 + 11i_1 - 8i_2 = 0 \quad \longrightarrow \quad 11i_1 - 8i_2 = 12 \qquad (1)$$

For loop 2,

$$-8i_1 + 14i_2 + 2v_o = 0$$

But $v_o = 3i_1$,

$$-8i_1 + 14i_2 + 6i_1 = 0 \quad \longrightarrow \quad i_1 = 7i_2 \qquad (2)$$

Substituting (2) into (1),

$$77i_2 - 8i_2 = 12 \quad \longrightarrow \quad \underline{i_2 = 0.1739} \text{ A and } \underline{i_1 = 7i_2 = 1.217} \text{ A}$$

PROPRIETARY MATERIAL. © 2007 The McGraw-Hill Companies, Inc. All rights reserved. No part of this Manual may be displayed, reproduced or distributed in any form or by any means, without the prior written permission of the publisher, or used beyond the limited distribution to teachers and educators permitted by McGraw-Hill for their individual course preparation. If you are a student using this Manual, you are using it without permission.

Chapter 3, Problem 47.

Rework Prob. 3.19 using mesh analysis.

Chapter 3, Problem 3.19

Use nodal analysis to find $\mathbf{V_1}$, $\mathbf{V_2}$, and $\mathbf{V_3}$ in the circuit in Fig. 3.68.

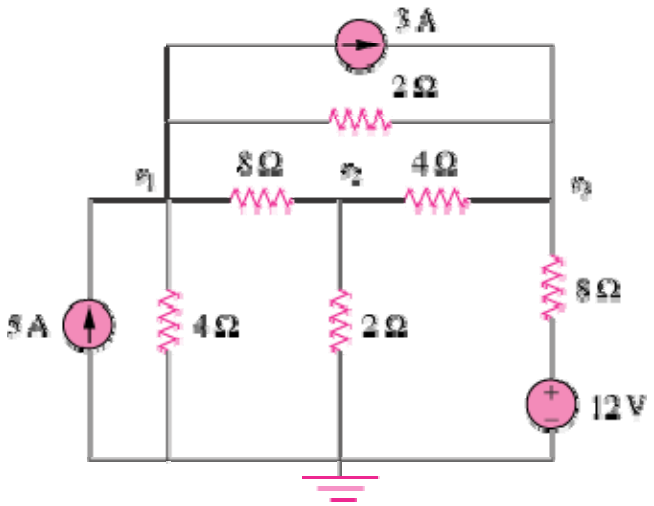

Figure 3.68

PROPRIETARY MATERIAL. © 2007 The McGraw-Hill Companies, Inc. All rights reserved. No part of this Manual may be displayed, reproduced or distributed in any form or by any means, without the prior written permission of the publisher, or used beyond the limited distribution to teachers and educators permitted by McGraw-Hill for their individual course preparation. If you are a student using this Manual, you are using it without permission.

Chapter 3, Solution 47

First, transform the current sources as shown below.

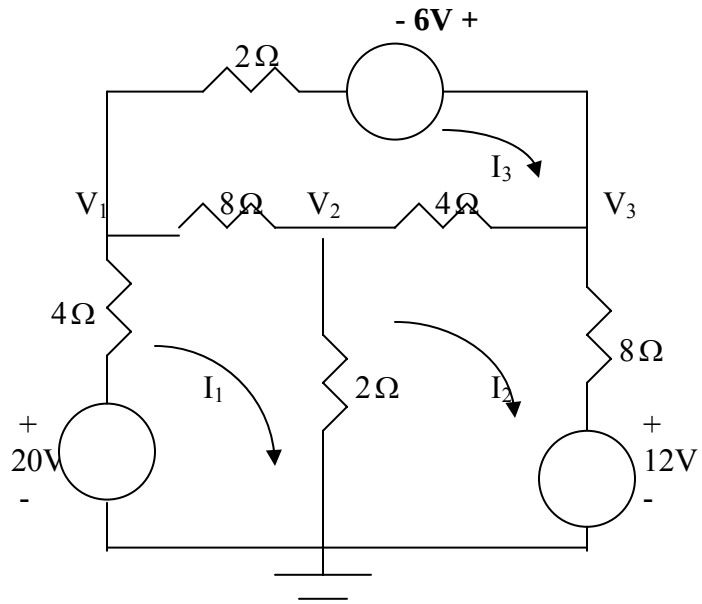

For mesh 1,

$$-20+14I_1-2I_2-8I_3=0 \quad\longrightarrow\quad 10=7I_1-I_2-4I_3 \qquad (1)$$

For mesh 2,

$$12+14I_2-2I_1-4I_3=0 \quad\longrightarrow\quad -6=-I_1+7I_2-2I_3 \qquad (2)$$

For mesh 3,

$$-6+14I_3-4I_2-8I_1=0 \quad\longrightarrow\quad 3=-4I_1-2I_2+7I_3 \qquad (3)$$

Putting (1) to (3) in matrix form, we obtain

$$\begin{pmatrix} 7 & -1 & -4 \\ -1 & 7 & -2 \\ -4 & -2 & 7 \end{pmatrix}\begin{pmatrix} I_1 \\ I_2 \\ I_3 \end{pmatrix}=\begin{pmatrix} 10 \\ -6 \\ 3 \end{pmatrix} \quad\longrightarrow\quad AI=B$$

Using MATLAB,

$$I=A^{-1}B=\begin{bmatrix} 2 \\ 0.0333 \\ 1.8667 \end{bmatrix} \quad\longrightarrow\quad I_1=2.5,\ I_2=0.0333, I_3=1.8667$$

But

$$I_1=\frac{20-V}{4} \quad\longrightarrow\quad V_1=20-4I_1=10\text{ V}$$

$$V_2=2(I_1-I_2)=4.933\text{ V}$$

Also,

$$I_2=\frac{V_3-12}{8} \quad\longrightarrow\quad V_3=12+8I_2=12.267\text{V}$$

PROPRIETARY MATERIAL. © 2007 The McGraw-Hill Companies, Inc. All rights reserved. No part of this Manual may be displayed, reproduced or distributed in any form or by any means, without the prior written permission of the publisher, or used beyond the limited distribution to teachers and educators permitted by McGraw-Hill for their individual course preparation. If you are a student using this Manual, you are using it without permission.

Chapter 3, Problem 48.

Determine the current through the 10-kΩ resistor in the circuit in Fig. 3.93 using mesh analysis.

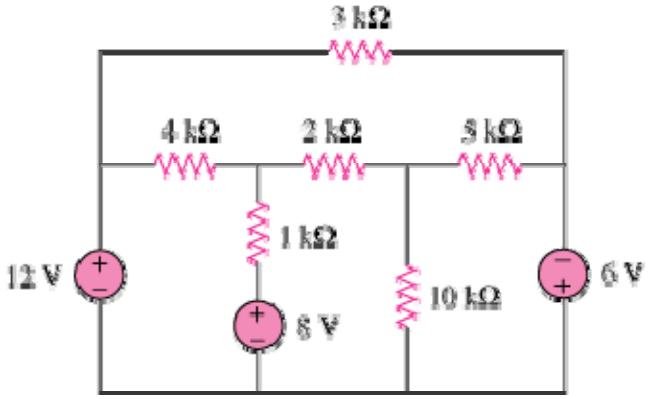

Figure 3.93

PROPRIETARY MATERIAL. © 2007 The McGraw-Hill Companies, Inc. All rights reserved. No part of this Manual may be displayed, reproduced or distributed in any form or by any means, without the prior written permission of the publisher, or used beyond the limited distribution to teachers and educators permitted by McGraw-Hill for their individual course preparation. If you are a student using this Manual, you are using it without permission.

Chapter 3, Solution 48

We apply mesh analysis and let the mesh currents be in mA.

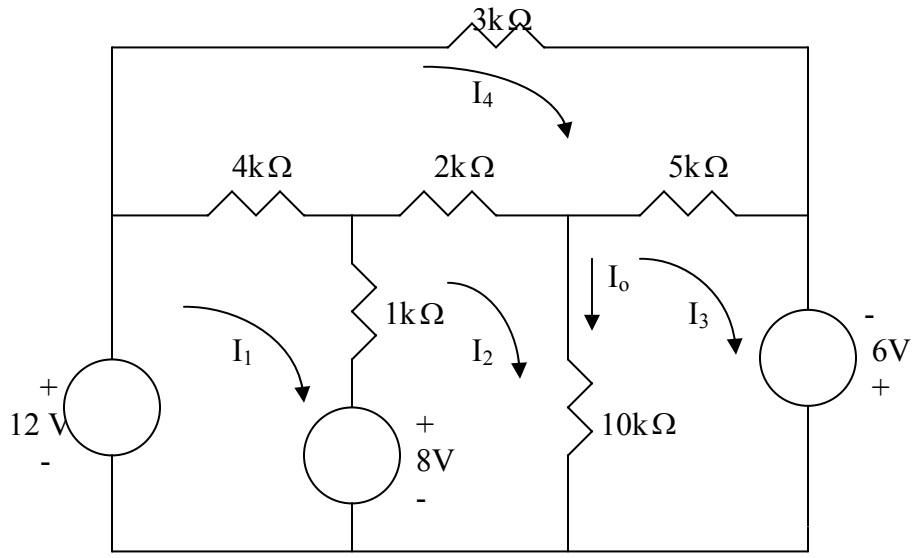

For mesh 1,

$$-12+8+5I_1-I_2-4I_4=0 \quad \longrightarrow \quad 4=5I_1-I_2-4I_4 \qquad (1)$$

For mesh 2,

$$-8+13I_2-I_1-10I_3-2I_4=0 \quad \longrightarrow \quad 8=-I_1+13I_2-10I_3-2I_4 \qquad (2)$$

For mesh 3,

$$-6+15I_3-10I_2-5I_4=0 \quad \longrightarrow \quad 6=-10I_2+15I_3-5I_4 \qquad (3)$$

For mesh 4,

$$-4I_1-2I_2-5I_3+14I_4=0 \qquad (4)$$

Putting (1) to (4) in matrix form gives

$$\begin{pmatrix} 5 & -1 & 0 & -4 \\ -1 & 13 & -10 & -2 \\ 0 & -10 & 15 & -5 \\ -4 & -2 & -5 & 14 \end{pmatrix}\begin{pmatrix} I_1 \\ I_2 \\ I_3 \\ I_4 \end{pmatrix}=\begin{pmatrix} 4 \\ 8 \\ 6 \\ 0 \end{pmatrix} \quad \longrightarrow \quad AI=B$$

Using MATLAB,

$$I=A^{-1}B=\begin{pmatrix} 7.217 \\ 8.087 \\ 7.791 \\ 6 \end{pmatrix}$$

The current through the 10kΩ resistor is $I_o = I_2 - I_3$ = <u>0.2957 mA</u>

PROPRIETARY MATERIAL. © 2007 The McGraw-Hill Companies, Inc. All rights reserved. No part of this Manual may be displayed, reproduced or distributed in any form or by any means, without the prior written permission of the publisher, or used beyond the limited distribution to teachers and educators permitted by McGraw-Hill for their individual course preparation. If you are a student using this Manual, you are using it without permission.

Chapter 3, Problem 49.

Find v_o and i_o in the circuit of Fig. 3.94.

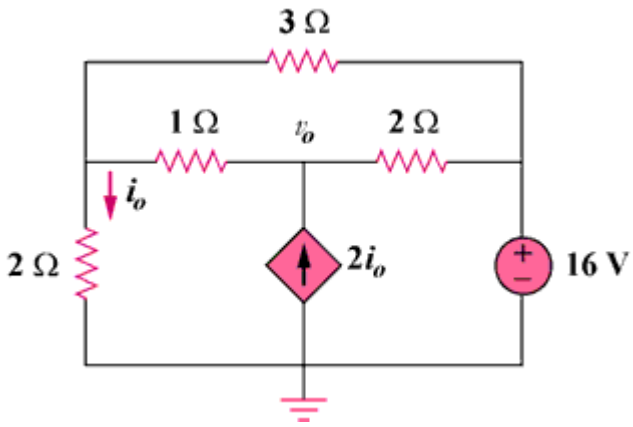

Figure 3.94

PROPRIETARY MATERIAL. © 2007 The McGraw-Hill Companies, Inc. All rights reserved. No part of this Manual may be displayed, reproduced or distributed in any form or by any means, without the prior written permission of the publisher, or used beyond the limited distribution to teachers and educators permitted by McGraw-Hill for their individual course preparation. If you are a student using this Manual, you are using it without permission.

Chapter 3, Solution 49

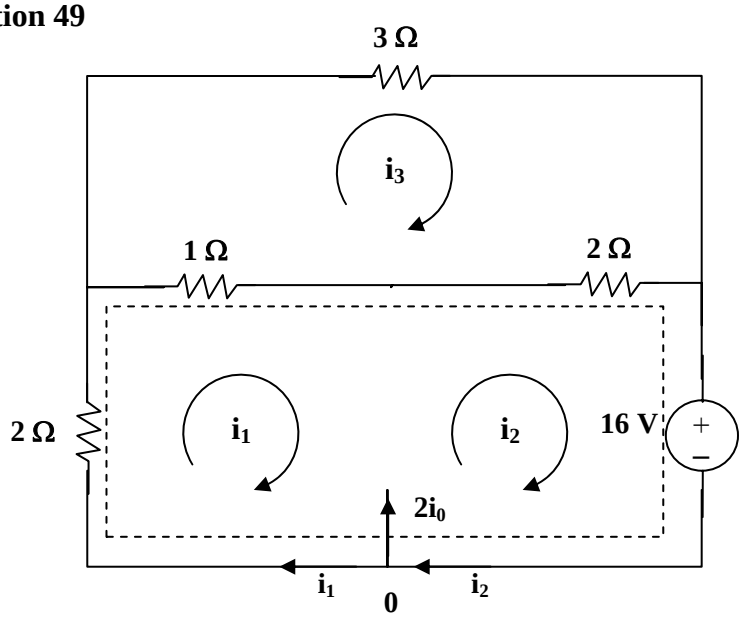

(a)

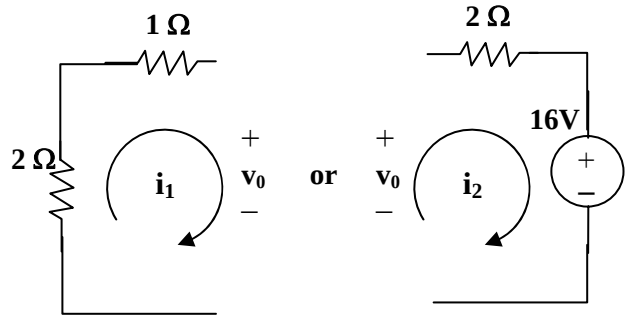

(b)

For the supermesh in figure (a),

$$3i_1 + 2i_2 - 3i_3 + 16 = 0 \qquad (1)$$

At node 0, $i_2 - i_1 = 2i_0$ and $i_0 = -i_1$ which leads to $i_2 = -i_1$ (2)

For loop 3, $-i_1 - 2i_2 + 6i_3 = 0$ which leads to $6i_3 = -i_1$ (3)

Solving (1) to (3), $i_1 = (-32/3)$A, $i_2 = (32/3)$A, $i_3 = (16/9)$A

$i_0 = -i_1 =$ **10.667 A**, from fig. (b), $v_0 = i_3 - 3i_1 = (16/9) + 32 =$ **33.78 V**.

PROPRIETARY MATERIAL. © 2007 The McGraw-Hill Companies, Inc. All rights reserved. No part of this Manual may be displayed, reproduced or distributed in any form or by any means, without the prior written permission of the publisher, or used beyond the limited distribution to teachers and educators permitted by McGraw-Hill for their individual course preparation. If you are a student using this Manual, you are using it without permission.

Chapter 3, Problem 50.

Use mesh analysis to find the current i_o in the circuit in Fig. 3.95.

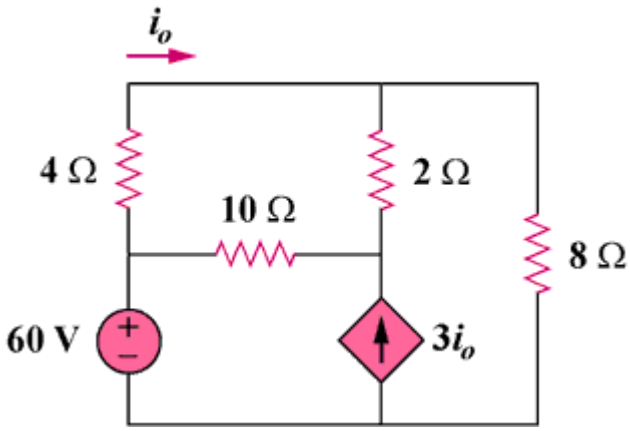

Figure 3.95

Chapter 3, Solution 50

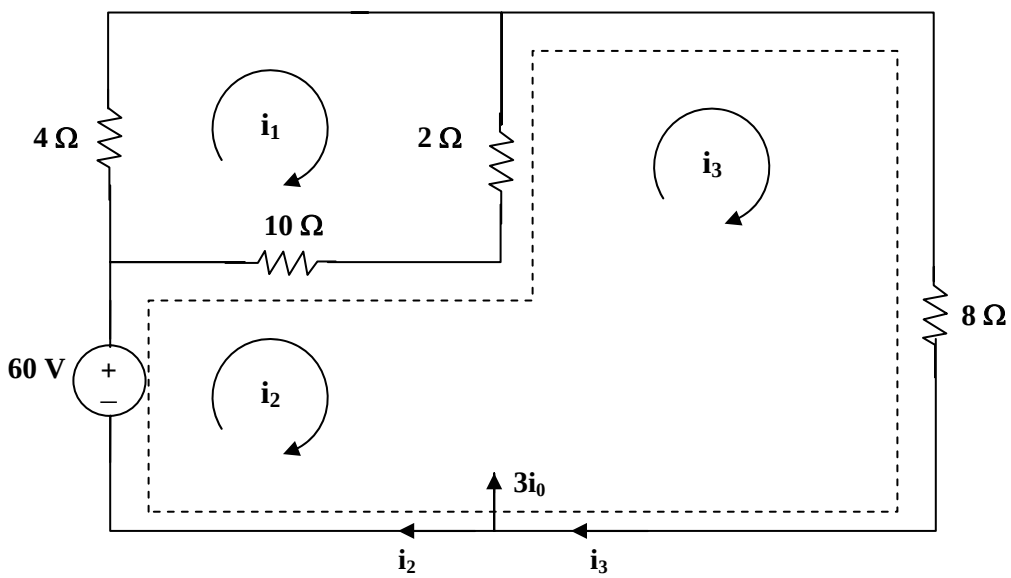

For loop 1, $16i_1 - 10i_2 - 2i_3 = 0$ which leads to $8i_1 - 5i_2 - i_3 = 0$ (1)

For the supermesh, $-60 + 10i_2 - 10i_1 + 10i_3 - 2i_1 = 0$

or $-6i_1 + 5i_2 + 5i_3 = 30$ (2)

Also, $3i_0 = i_3 - i_2$ and $i_0 = i_1$ which leads to $3i_1 = i_3 - i_2$ (3)

Solving (1), (2), and (3), we obtain $i_1 = 1.731$ and $i_0 = i_1 =$ **1.731 A**

PROPRIETARY MATERIAL. © 2007 The McGraw-Hill Companies, Inc. All rights reserved. No part of this Manual may be displayed, reproduced or distributed in any form or by any means, without the prior written permission of the publisher, or used beyond the limited distribution to teachers and educators permitted by McGraw-Hill for their individual course preparation. If you are a student using this Manual, you are using it without permission.

Chapter 3, Problem 51.

Apply mesh analysis to find v_o in the circuit in Fig. 3.96.

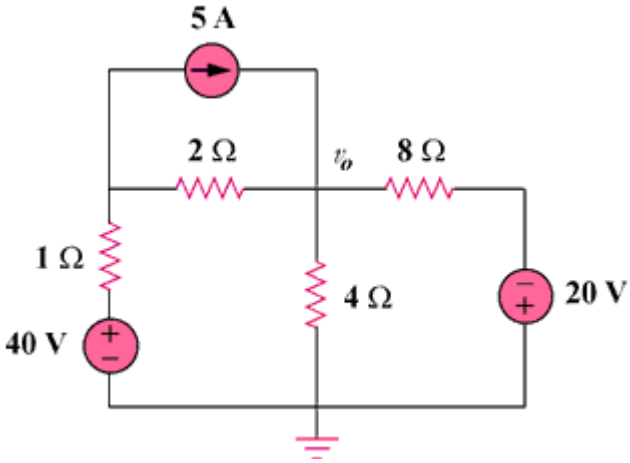

Figure 3.96

Chapter 3, Solution 51

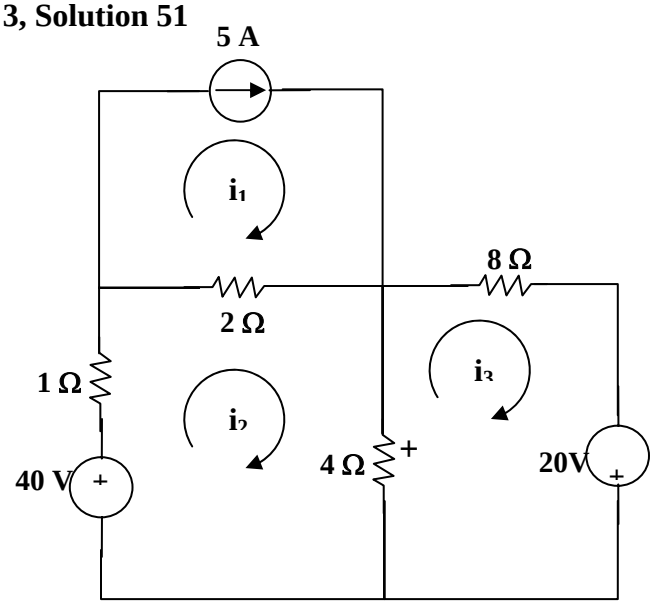

For loop 1, $i_1 = 5A$ (1)

For loop 2, $-40 + 7i_2 - 2i_1 - 4i_3 = 0$ which leads to $50 = 7i_2 - 4i_3$ (2)

For loop 3, $-20 + 12i_3 - 4i_2 = 0$ which leads to $5 = -i_2 + 3i_3$ (3)

Solving with (2) and (3), $i_2 = 10$ A, $i_3 = 5$ A

And, $v_0 = 4(i_2 - i_3) = 4(10 - 5) =$ **20 V**.

PROPRIETARY MATERIAL. © 2007 The McGraw-Hill Companies, Inc. All rights reserved. No part of this Manual may be displayed, reproduced or distributed in any form or by any means, without the prior written permission of the publisher, or used beyond the limited distribution to teachers and educators permitted by McGraw-Hill for their individual course preparation. If you are a student using this Manual, you are using it without permission.

Chapter 3, Problem 52.

Use mesh analysis to find $\boldsymbol{i_1}$, $\boldsymbol{i_2}$, and $\boldsymbol{i_3}$ in the circuit of Fig. 3.97.

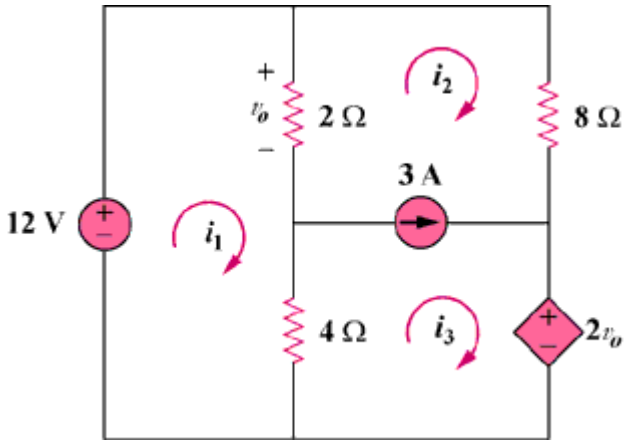

Figure 3.97

PROPRIETARY MATERIAL. © 2007 The McGraw-Hill Companies, Inc. All rights reserved. No part of this Manual may be displayed, reproduced or distributed in any form or by any means, without the prior written permission of the publisher, or used beyond the limited distribution to teachers and educators permitted by McGraw-Hill for their individual course preparation. If you are a student using this Manual, you are using it without permission.

Chapter 3, Solution 52

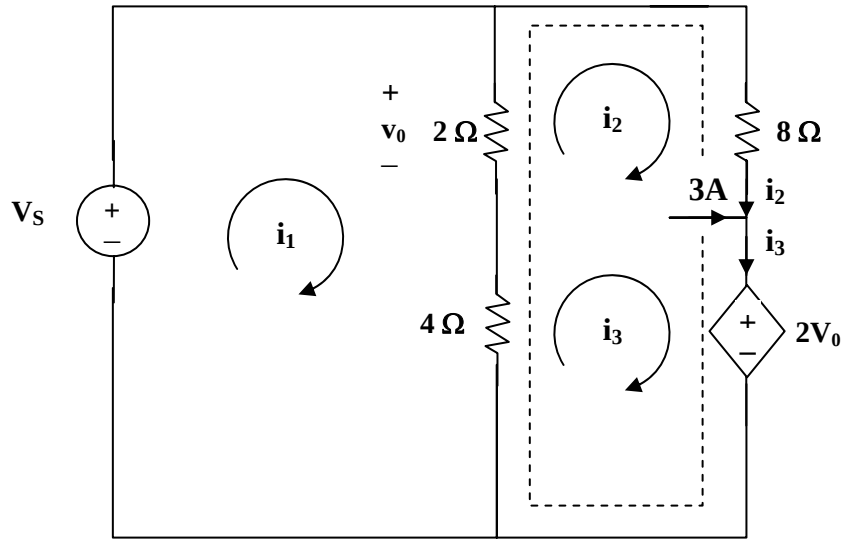

For mesh 1,

$$2(i_1 - i_2) + 4(i_1 - i_3) - 12 = 0 \text{ which leads to } 3i_1 - i_2 - 2i_3 = 6 \qquad (1)$$

For the supermesh, $2(i_2 - i_1) + 8i_2 + 2v_0 + 4(i_3 - i_1) = 0$

But $v_0 = 2(i_1 - i_2)$ which leads to $-i_1 + 3i_2 + 2i_3 = 0$ (2)

For the independent current source, $i_3 = 3 + i_2$ (3)

Solving (1), (2), and (3), we obtain,

$$i_1 = \underline{\mathbf{3.5\ A}},\ i_2 = \underline{\mathbf{-0.5\ A}},\ i_3 = \underline{\mathbf{2.5\ A}}.$$

PROPRIETARY MATERIAL. © 2007 The McGraw-Hill Companies, Inc. All rights reserved. No part of this Manual may be displayed, reproduced or distributed in any form or by any means, without the prior written permission of the publisher, or used beyond the limited distribution to teachers and educators permitted by McGraw-Hill for their individual course preparation. If you are a student using this Manual, you are using it without permission.

Chapter 3, Problem 53.

Find the mesh currents in the circuit of Fig. 3.98 using MATLAB.

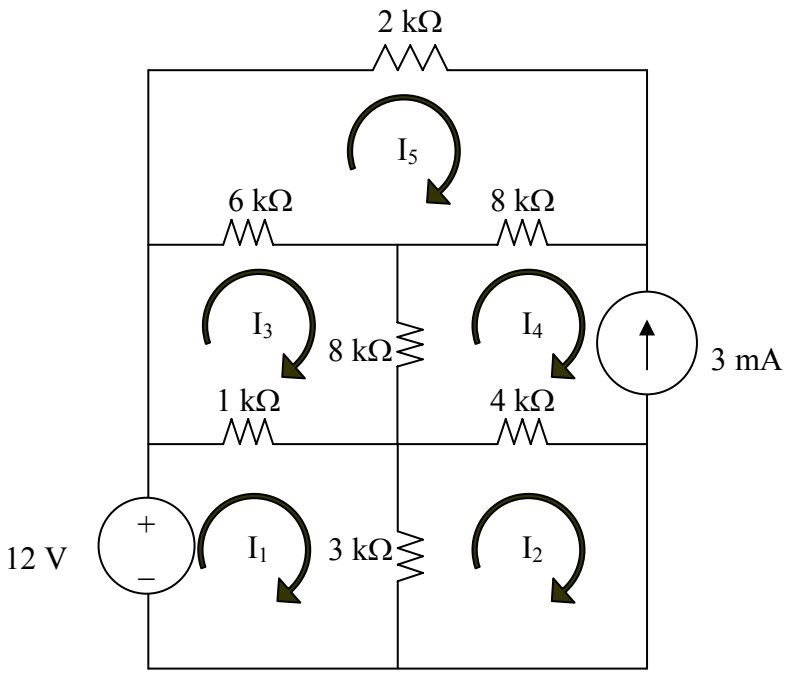

Figure 3.98 For Prob. 3.53.

Chapter 3, Solution 53

Applying mesh analysis leads to;

$$-12 + 4kI_1 - 3kI_2 - 1kI_3 = 0 \qquad (1)$$
$$-3kI_1 + 7kI_2 - 4kI_4 = 0$$
$$-3kI_1 + 7kI_2 = -12 \qquad (2)$$
$$-1kI_1 + 15kI_3 - 8kI_4 - 6kI_5 = 0$$
$$-1kI_1 + 15kI_3 - 6k = -24 \qquad (3)$$
$$I_4 = -3mA \qquad (4)$$
$$-6kI_3 - 8kI_4 + 16kI_5 = 0$$
$$-6kI_3 + 16kI_5 = -24 \qquad (5)$$

PROPRIETARY MATERIAL. © 2007 The McGraw-Hill Companies, Inc. All rights reserved. No part of this Manual may be displayed, reproduced or distributed in any form or by any means, without the prior written permission of the publisher, or used beyond the limited distribution to teachers and educators permitted by McGraw-Hill for their individual course preparation. If you are a student using this Manual, you are using it without permission.

Putting these in matrix form (having substituted I_4 = 3mA in the above),

$$\begin{bmatrix} 4 & -3 & -1 & 0 \\ -3 & 7 & 0 & 0 \\ -1 & 0 & 15 & -6 \\ 0 & 0 & -6 & 16 \end{bmatrix} k \begin{bmatrix} I_1 \\ I_2 \\ I_3 \\ I_5 \end{bmatrix} = \begin{bmatrix} 12 \\ -12 \\ -24 \\ -24 \end{bmatrix}$$

ZI = V

Using MATLAB,

```
>> Z = [4,-3,-1,0;-3,7,0,0;-1,0,15,-6;0,0,-6,16]

Z =

     4    -3    -1     0
    -3     7     0     0
    -1     0    15    -6
     0     0    -6    16

>> V = [12,-12,-24,-24]'

V =

    12
   -12
   -24
   -24
```

We obtain,

```
>> I = inv(Z)*V

        I =
                1.6196 mA
                –1.0202 mA
                –2.461 mA
                3 mA
                –2.423 mA
```

PROPRIETARY MATERIAL. © 2007 The McGraw-Hill Companies, Inc. All rights reserved. No part of this Manual may be displayed, reproduced or distributed in any form or by any means, without the prior written permission of the publisher, or used beyond the limited distribution to teachers and educators permitted by McGraw-Hill for their individual course preparation. If you are a student using this Manual, you are using it without permission.

Chapter 3, Problem 54.

Find the mesh currents i_1, i_2, and i_3 in the circuit in Fig. 3.99.

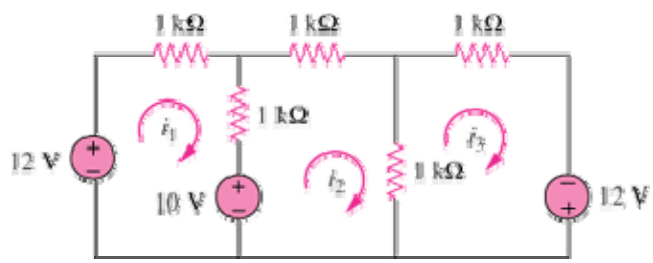

Figure 3.99

Chapter 3, Solution 54

Let the mesh currents be in mA. For mesh 1,

$$-12+10+2I_1-I_2=0 \quad \longrightarrow \quad 2=2I_1-I_2 \qquad (1)$$

For mesh 2,

$$-10+3I_2-I_1-I_3=0 \quad \longrightarrow \quad 10=-I_1+3I_2-I_3 \qquad (2)$$

For mesh 3,

$$-12+2I_3-I_2=0 \quad \longrightarrow \quad 12=-I_2+2I_3 \qquad (3)$$

Putting (1) to (3) in matrix form leads to

$$\begin{pmatrix} 2 & -1 & 0 \\ -1 & 3 & -1 \\ 0 & -1 & 2 \end{pmatrix}\begin{pmatrix} I_1 \\ I_2 \\ I_3 \end{pmatrix}=\begin{pmatrix} 2 \\ 10 \\ 12 \end{pmatrix} \quad \longrightarrow \quad AI=B$$

Using MATLAB,

$$I=A^{-1}B=\begin{bmatrix} 5.25 \\ 8.5 \\ 10.25 \end{bmatrix} \quad \longrightarrow \underline{I_1=5.25\text{ mA},\ I_2=8.5\text{ mA}, I_3=10.25\text{ mA}}$$

PROPRIETARY MATERIAL. © 2007 The McGraw-Hill Companies, Inc. All rights reserved. No part of this Manual may be displayed, reproduced or distributed in any form or by any means, without the prior written permission of the publisher, or used beyond the limited distribution to teachers and educators permitted by McGraw-Hill for their individual course preparation. If you are a student using this Manual, you are using it without permission.

Chapter 3, Problem 55.

In the circuit of Fig. 3.100, solve for $\boldsymbol{i_1}$, $\boldsymbol{i_2}$, and $\boldsymbol{i_3}$.

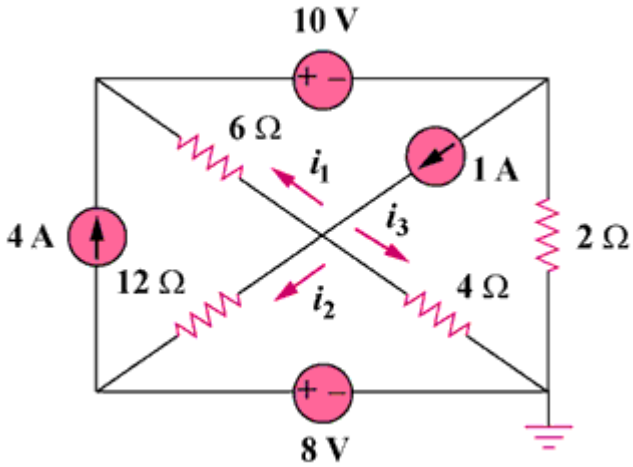

Figure 3.100

PROPRIETARY MATERIAL. © 2007 The McGraw-Hill Companies, Inc. All rights reserved. No part of this Manual may be displayed, reproduced or distributed in any form or by any means, without the prior written permission of the publisher, or used beyond the limited distribution to teachers and educators permitted by McGraw-Hill for their individual course preparation. If you are a student using this Manual, you are using it without permission.

Chapter 3, Solution 55

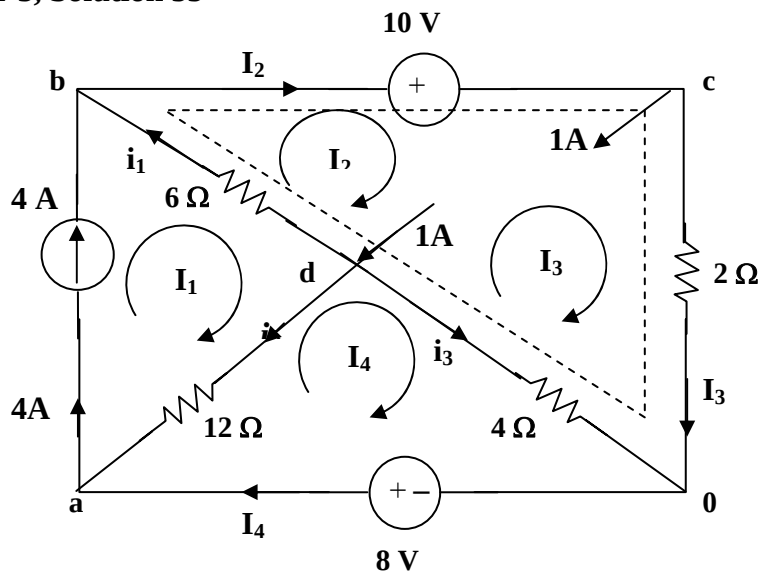

It is evident that $I_1 = 4$ (1)

For mesh 4, $12(I_4 - I_1) + 4(I_4 - I_3) - 8 = 0$ (2)

For the supermesh $6(I_2 - I_1) + 10 + 2I_3 + 4(I_3 - I_4) = 0$
or $-3I_1 + 3I_2 + 3I_3 - 2I_4 = -5$ (3)

At node c, $I_2 = I_3 + 1$ (4)

Solving (1), (2), (3), and (4) yields, $I_1 = 4A$, $I_2 = 3A$, $I_3 = 2A$, and $I_4 = 4A$

At node b, $i_1 = I_2 - I_1 =$ **-1A**

At node a, $i_2 = 4 - I_4 =$ **0A**

At node 0, $i_3 = I_4 - I_3 =$ **2A**

PROPRIETARY MATERIAL. © 2007 The McGraw-Hill Companies, Inc. All rights reserved. No part of this Manual may be displayed, reproduced or distributed in any form or by any means, without the prior written permission of the publisher, or used beyond the limited distribution to teachers and educators permitted by McGraw-Hill for their individual course preparation. If you are a student using this Manual, you are using it without permission.

Chapter 3, Problem 56.

Determine v_1 and v_2 in the circuit of Fig. 3.101.

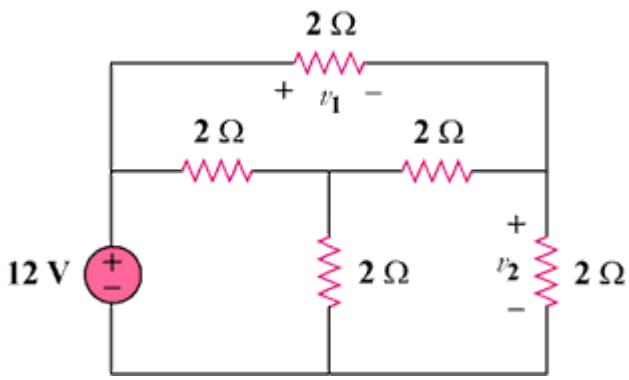

Figure 3.101

PROPRIETARY MATERIAL. © 2007 The McGraw-Hill Companies, Inc. All rights reserved. No part of this Manual may be displayed, reproduced or distributed in any form or by any means, without the prior written permission of the publisher, or used beyond the limited distribution to teachers and educators permitted by McGraw-Hill for their individual course preparation. If you are a student using this Manual, you are using it without permission.

Chapter 3, Solution 56

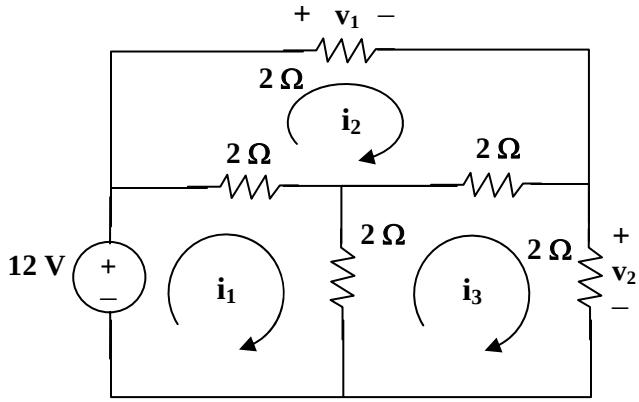

For loop 1, $12 = 4i_1 - 2i_2 - 2i_3$ which leads to $6 = 2i_1 - i_2 - i_3$ (1)

For loop 2, $0 = 6i_2 - 2i_1 - 2\,i_3$ which leads to $0 = -i_1 + 3i_2 - i_3$ (2)

For loop 3, $0 = 6i_3 - 2i_1 - 2i_2$ which leads to $0 = -i_1 - i_2 + 3i_3$ (3)

In matrix form (1), (2), and (3) become,

$$\begin{bmatrix} 2 & -1 & -1 \\ -1 & 3 & -1 \\ -1 & -1 & 3 \end{bmatrix}\begin{bmatrix} i_1 \\ i_2 \\ i_3 \end{bmatrix} = \begin{bmatrix} 6 \\ 0 \\ 0 \end{bmatrix}$$

$$\Delta = \begin{vmatrix} 2 & -1 & -1 \\ -1 & 3 & -1 \\ -1 & -1 & 3 \end{vmatrix} = 8, \quad \Delta_2 = \begin{vmatrix} 2 & 6 & -1 \\ -1 & 3 & -1 \\ -1 & 0 & 3 \end{vmatrix} = 24$$

$$\Delta_3 = \begin{vmatrix} 2 & -1 & 6 \\ -1 & 3 & 0 \\ -1 & -1 & 0 \end{vmatrix} = 24 \text{, therefore } i_2 = i_3 = 24/8 = 3\text{A},$$

$v_1 = 2i_2 =$ **<u>6 volts</u>**, $v = 2i_3 =$ **<u>6 volts</u>**

<u>PROPRIETARY MATERIAL</u>. © 2007 The McGraw-Hill Companies, Inc. All rights reserved. <u>No part of this Manual may be displayed, reproduced or distributed in any form or by any means, without the prior written permission of the publisher, or used beyond the limited distribution to teachers and educators permitted by McGraw-Hill for their individual course preparation. If you are a student using this Manual, you are using it without permission.</u>

Chapter 3, Problem 57.

In the circuit in Fig. 3.102, find the values of R, V_1, and V_2 given that i_o = 18 mA.

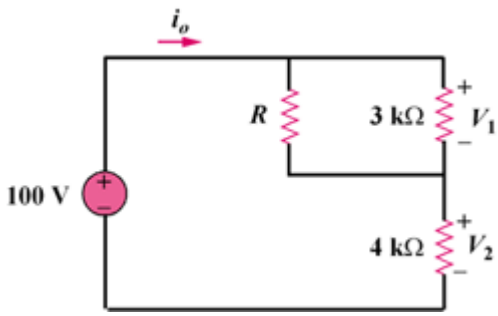

Figure 3.102

Chapter 3, Solution 57

Assume R is in kilo-ohms.

$V_2 = 4k\Omega x 18mA = \underline{72V}$, $\quad V_1 = 100 - V_2 = 100 - 72 = \underline{28V}$

Current through R is

$i_R = \dfrac{3}{3+R} i_{o,} \qquad V_1 = i_R R \quad \longrightarrow \quad 28 = \dfrac{3}{3+R}(18)R$

This leads to R = 84/26 = **3.23 kΩ**

PROPRIETARY MATERIAL. © 2007 The McGraw-Hill Companies, Inc. All rights reserved. No part of this Manual may be displayed, reproduced or distributed in any form or by any means, without the prior written permission of the publisher, or used beyond the limited distribution to teachers and educators permitted by McGraw-Hill for their individual course preparation. If you are a student using this Manual, you are using it without permission.

Chapter 3, Problem 58.

Find $\mathbf{i_1}$, $\boldsymbol{i_2}$, and $\boldsymbol{i_3}$ the circuit in Fig. 3.103.

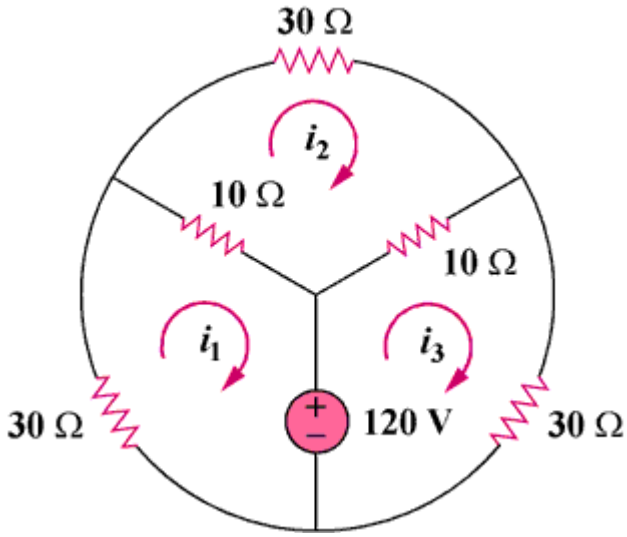

Figure 3.103

Chapter 3, Solution 58

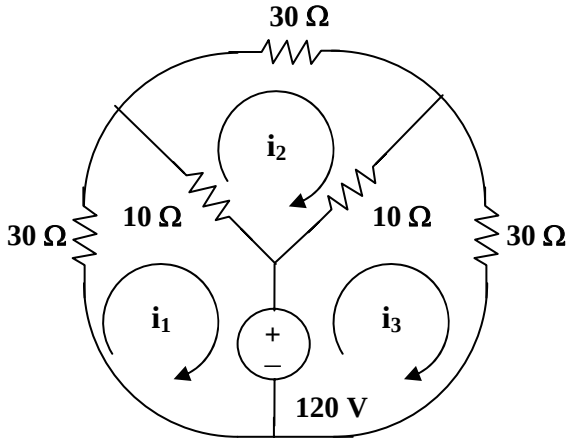

For loop 1, $120 + 40i_1 - 10i_2 = 0$, which leads to $-12 = 4i_1 - i_2$ (1)

For loop 2, $50i_2 - 10i_1 - 10i_3 = 0$, which leads to $-i_1 + 5i_2 - i_3 = 0$ (2)

For loop 3, $-120 - 10i_2 + 40i_3 = 0$, which leads to $12 = -i_2 + 4i_3$ (3)

Solving (1), (2), and (3), we get, i_1 = **-3A**, i_2 = **0**, and i_3 = **3A**

PROPRIETARY MATERIAL. © 2007 The McGraw-Hill Companies, Inc. All rights reserved. No part of this Manual may be displayed, reproduced or distributed in any form or by any means, without the prior written permission of the publisher, or used beyond the limited distribution to teachers and educators permitted by McGraw-Hill for their individual course preparation. If you are a student using this Manual, you are using it without permission.

Chapter 3, Problem 59.

Rework Prob. 3.30 using mesh analysis.

Chapter 3, Problem 30.

Using nodal analysis, find $\boldsymbol{v_o}$ and $\boldsymbol{i_o}$ in the circuit of Fig. 3.79.

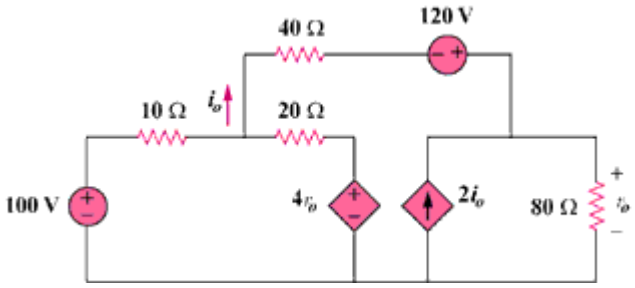

Figure 3.79

PROPRIETARY MATERIAL. © 2007 The McGraw-Hill Companies, Inc. All rights reserved. No part of this Manual may be displayed, reproduced or distributed in any form or by any means, without the prior written permission of the publisher, or used beyond the limited distribution to teachers and educators permitted by McGraw-Hill for their individual course preparation. If you are a student using this Manual, you are using it without permission.

Chapter 3, Solution 59

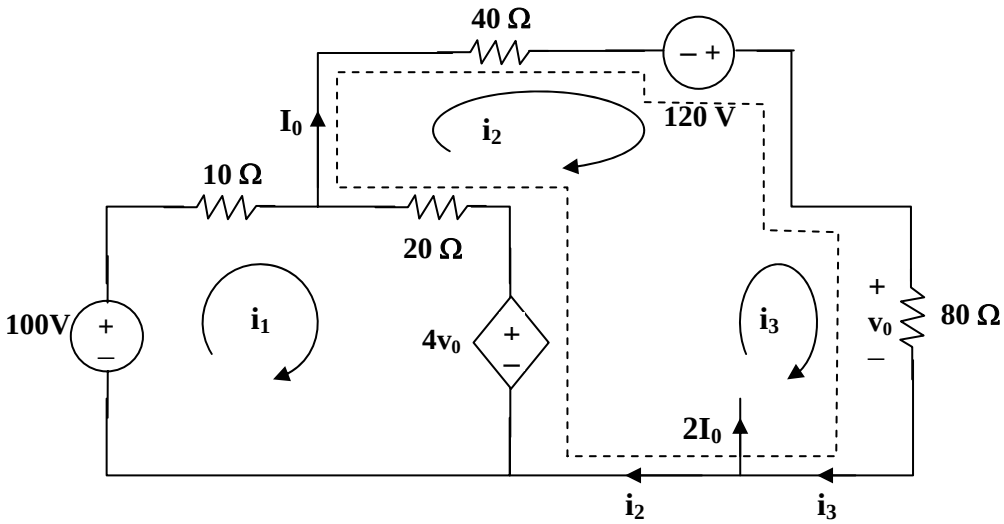

For loop 1, $-100 + 30i_1 - 20i_2 + 4v_0 = 0$, where $v_0 = 80i_3$

or $5 = 1.5i_1 - i_2 + 16i_3$ (1)

For the supermesh, $60i_2 - 20i_1 - 120 + 80i_3 - 4\,v_0 = 0$, where $v_0 = 80i_3$

or $6 = -i_1 + 3i_2 - 12i_3$ (2)

Also, $2I_0 = i_3 - i_2$ and $I_0 = i_2$, hence, $3i_2 = i_3$ (3)

From (1), (2), and (3),
$$\begin{bmatrix} 3 & -2 & 32 \\ -1 & 3 & -12 \\ 0 & 3 & -1 \end{bmatrix}\begin{bmatrix} i_1 \\ i_2 \\ i_3 \end{bmatrix} = \begin{bmatrix} 10 \\ 6 \\ 0 \end{bmatrix}$$

$$\Delta = \begin{vmatrix} 3 & -2 & 32 \\ -1 & 3 & -12 \\ 0 & 3 & -1 \end{vmatrix} = 5,\ \Delta_2 = \begin{vmatrix} 3 & 10 & 32 \\ -1 & 6 & -12 \\ 0 & 0 & -1 \end{vmatrix} = -28,\ \Delta_3 = \begin{vmatrix} 3 & -2 & 10 \\ -1 & 3 & 6 \\ 0 & 3 & 0 \end{vmatrix} = -84$$

$I_0 = i_2 = \Delta_2/\Delta = -28/5 =$ **-5.6 A**

$v_0 = 8i_3 = (-84/5)80 =$ **-1.344 kvolts**

PROPRIETARY MATERIAL. © 2007 The McGraw-Hill Companies, Inc. All rights reserved. No part of this Manual may be displayed, reproduced or distributed in any form or by any means, without the prior written permission of the publisher, or used beyond the limited distribution to teachers and educators permitted by McGraw-Hill for their individual course preparation. If you are a student using this Manual, you are using it without permission.

Chapter 3, Problem 60.

Calculate the power dissipated in each resistor in the circuit in Fig. 3.104.

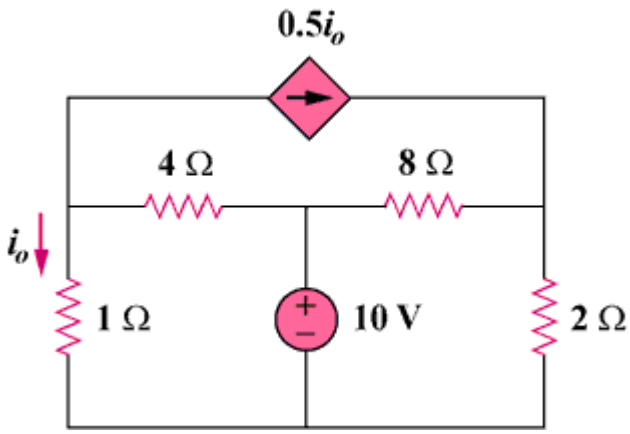

Figure 3.104

Chapter 3, Solution 60

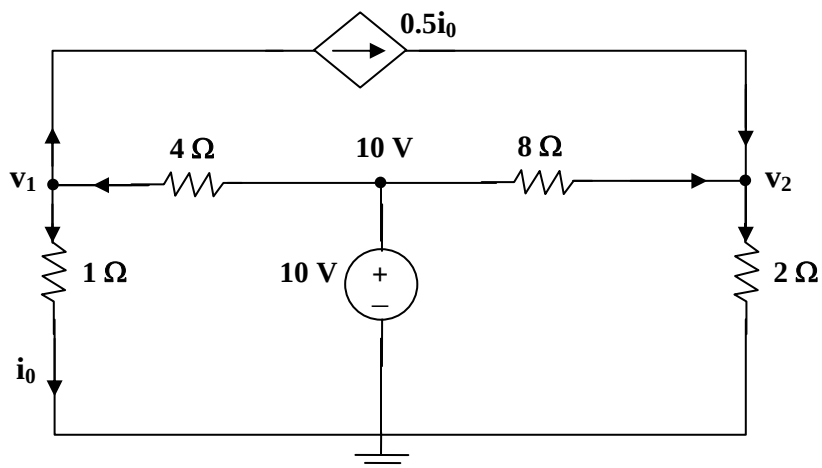

At node 1, $(v_1/1) + (0.5v_1/1) = (10 - v_1)/4$, which leads to $v_1 = 10/7$

At node 2, $(0.5v_1/1) + ((10 - v_2)/8) = v_2/2$ which leads to $v_2 = 22/7$

$P_{1\Omega} = (v_1)^2/1 =$ **2.041 watts**, $P_{2\Omega} = (v_2)^2/2 =$ **4.939 watts**

$P_{4\Omega} = (10 - v_1)^2/4 =$ **18.38 watts**, $P_{8\Omega} = (10 - v_2)^2/8 =$ **5.88 watts**

PROPRIETARY MATERIAL. © 2007 The McGraw-Hill Companies, Inc. All rights reserved. No part of this Manual may be displayed, reproduced or distributed in any form or by any means, without the prior written permission of the publisher, or used beyond the limited distribution to teachers and educators permitted by McGraw-Hill for their individual course preparation. If you are a student using this Manual, you are using it without permission.

Chapter 3, Problem 61.

Calculate the current gain i_o/i_s in the circuit of Fig. 3.105.

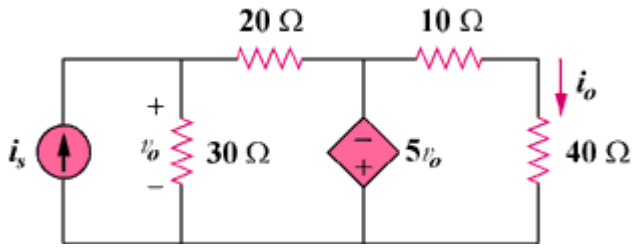

Figure 3.105

Chapter 3, Solution 61

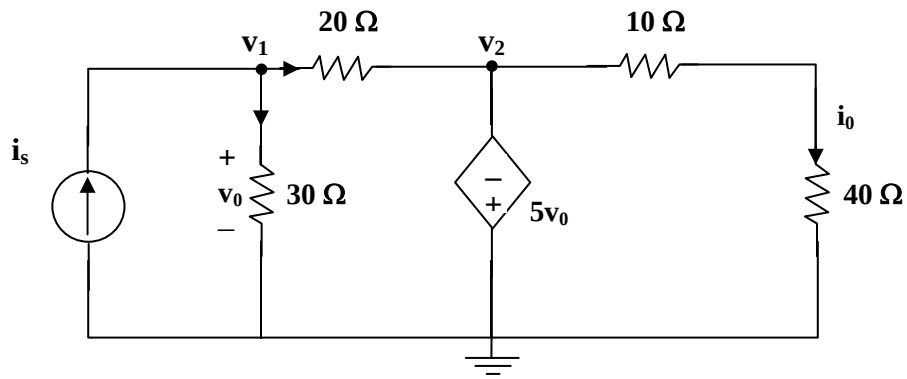

At node 1, $i_s = (v_1/30) + ((v_1 - v_2)/20)$ which leads to $60i_s = 5v_1 - 3v_2$ (1)

But $v_2 = -5v_0$ and $v_0 = v_1$ which leads to $v_2 = -5v_1$

Hence, $60i_s = 5v_1 + 15v_1 = 20v_1$ which leads to $v_1 = 3i_s$, $v_2 = -15i_s$

$i_0 = v_2/50 = -15i_s/50$ which leads to $i_0/i_s = -15/50 =$ **–0.3**

PROPRIETARY MATERIAL. © 2007 The McGraw-Hill Companies, Inc. All rights reserved. No part of this Manual may be displayed, reproduced or distributed in any form or by any means, without the prior written permission of the publisher, or used beyond the limited distribution to teachers and educators permitted by McGraw-Hill for their individual course preparation. If you are a student using this Manual, you are using it without permission.

Chapter 3, Problem 62.

Find the mesh currents i_1, i_2, and i_3 in the network of Fig. 3.106.

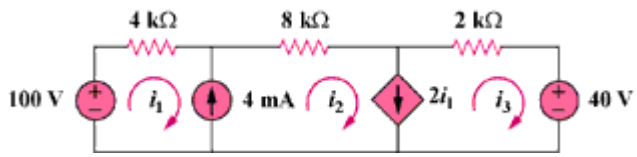

Figure 3.106

Chapter 3, Solution 62

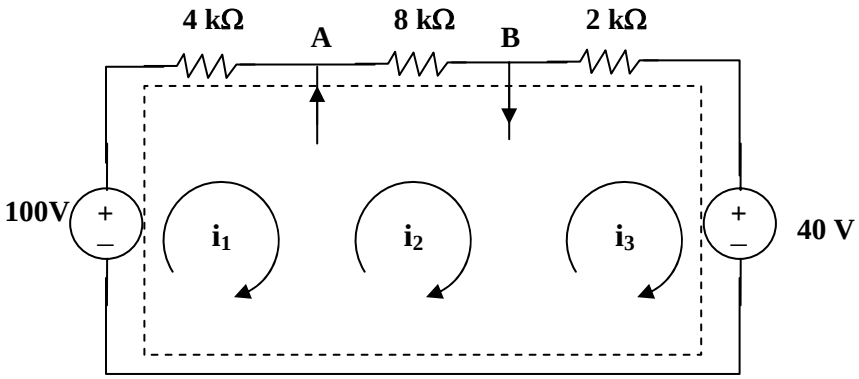

We have a supermesh. Let all R be in kΩ, i in mA, and v in volts.

For the supermesh, $-100 + 4i_1 + 8i_2 + 2i_3 + 40 = 0$ or $30 = 2i_1 + 4i_2 + i_3$ (1)

At node A, $i_1 + 4 = i_2$ (2)

At node B, $i_2 = 2i_1 + i_3$ (3)

Solving (1), (2), and (3), we get i_1 = **2 mA**, i_2 = **6 mA**, and i_3 = **2 mA**.

PROPRIETARY MATERIAL. © 2007 The McGraw-Hill Companies, Inc. All rights reserved. No part of this Manual may be displayed, reproduced or distributed in any form or by any means, without the prior written permission of the publisher, or used beyond the limited distribution to teachers and educators permitted by McGraw-Hill for their individual course preparation. If you are a student using this Manual, you are using it without permission.

Chapter 3, Problem 63.

Find v_x, and i_x in the circuit shown in Fig. 3.107.

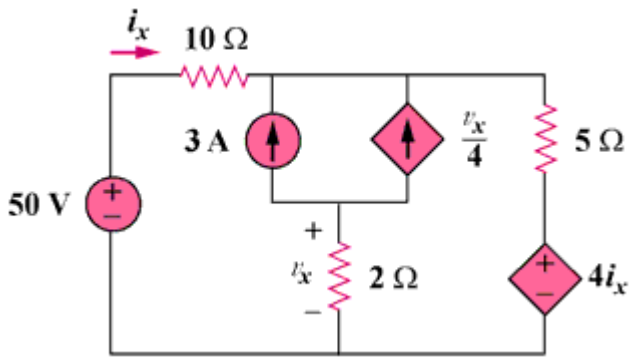

Figure 3.107

Chapter 3, Solution 63

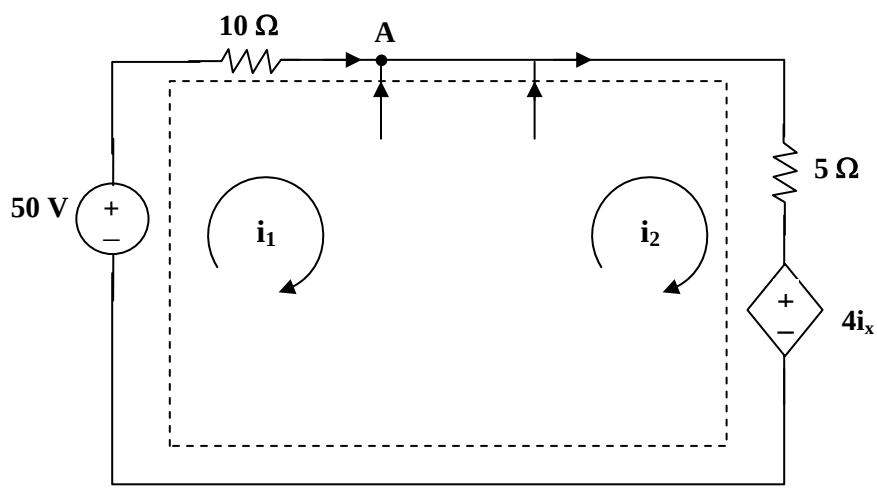

For the supermesh, $-50 + 10i_1 + 5i_2 + 4i_x = 0$, but $i_x = i_1$. Hence,

$$50 = 14i_1 + 5i_2 \qquad (1)$$

At node A, $i_1 + 3 + (v_x/4) = i_2$, but $v_x = 2(i_1 - i_2)$, hence, $i_1 + 2 = i_2$ (2)

Solving (1) and (2) gives $i_1 = 2.105$ A and $i_2 = 4.105$ A

$v_x = 2(i_1 - i_2) =$ **–4 volts** and $i_x = i_2 - 2 =$ **2.105 amp**

PROPRIETARY MATERIAL. © 2007 The McGraw-Hill Companies, Inc. All rights reserved. No part of this Manual may be displayed, reproduced or distributed in any form or by any means, without the prior written permission of the publisher, or used beyond the limited distribution to teachers and educators permitted by McGraw-Hill for their individual course preparation. If you are a student using this Manual, you are using it without permission.

Chapter 3, Problem 64.

Find v_o, and i_o in the circuit of Fig. 3.108.

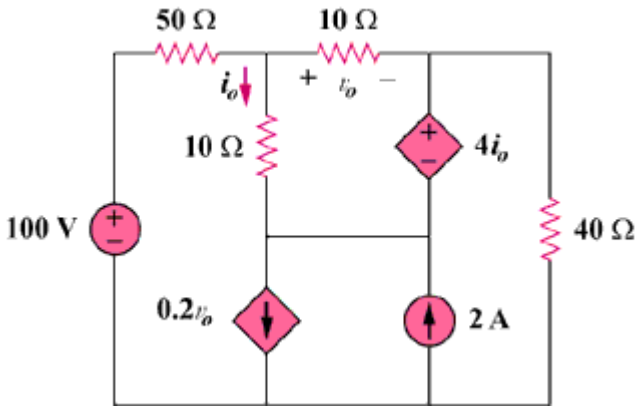

Figure 3.108

PROPRIETARY MATERIAL. © 2007 The McGraw-Hill Companies, Inc. All rights reserved. No part of this Manual may be displayed, reproduced or distributed in any form or by any means, without the prior written permission of the publisher, or used beyond the limited distribution to teachers and educators permitted by McGraw-Hill for their individual course preparation. If you are a student using this Manual, you are using it without permission.

Chapter 3, Solution 64

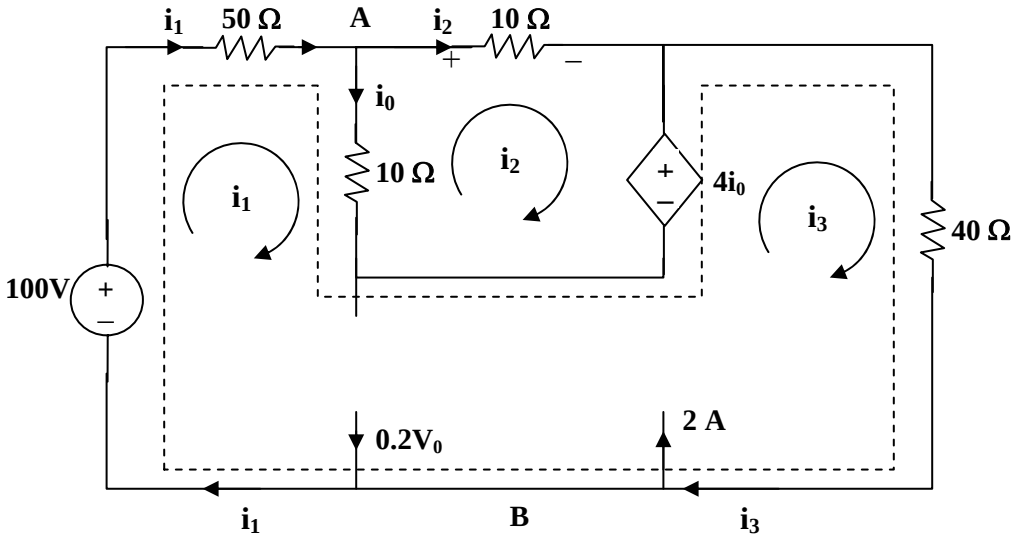

For mesh 2, $20i_2 - 10i_1 + 4i_0 = 0$ (1)

But at node A, $i_o = i_1 - i_2$ so that (1) becomes $i_1 = (16/6)i_2$ (2)

For the supermesh, $-100 + 50i_1 + 10(i_1 - i_2) - 4i_0 + 40i_3 = 0$

or $50 = 28i_1 - 3i_2 + 20i_3$ (3)

At node B, $i_3 + 0.2v_0 = 2 + i_1$ (4)

But, $v_0 = 10i_2$ so that (4) becomes $i_3 = 2 + (2/3)i_2$ (5)

Solving (1) to (5), $i_2 = 0.11764$,

$v_0 = 10i_2 =$ **1.1764 volts**, $i_0 = i_1 - i_2 = (5/3)i_2 =$ **196.07 mA**

PROPRIETARY MATERIAL. © 2007 The McGraw-Hill Companies, Inc. All rights reserved. No part of this Manual may be displayed, reproduced or distributed in any form or by any means, without the prior written permission of the publisher, or used beyond the limited distribution to teachers and educators permitted by McGraw-Hill for their individual course preparation. If you are a student using this Manual, you are using it without permission.

Chapter 3, Problem 65.

Use *MATLAB* to solve for the mesh currents in the circuit of Fig. 3.109.

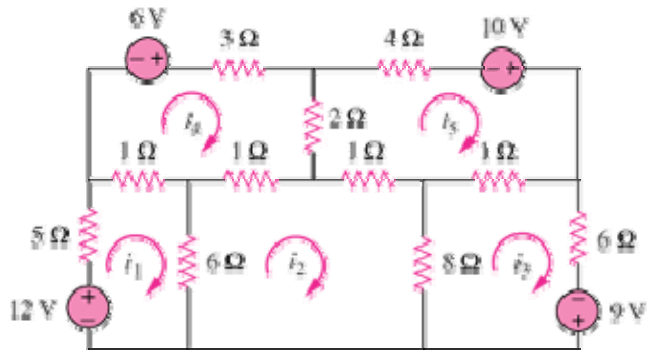

Figure 3.109

Chapter 3, Solution 65

For mesh 1,

$$-12 + 12I_1 - 6I_2 - I_4 = 0 \text{ or}$$
$$12 = 12I_1 - 6I_2 - I_4 \qquad (1)$$

For mesh 2,

$$-6I_1 + 16I_2 - 8I_3 - I_4 - I_5 = 0 \qquad (2)$$

For mesh 3,

$$-8I_2 + 15I_3 - I_5 - 9 = 0 \text{ or}$$
$$9 = -8I_2 + 15I_3 - I_5 \qquad (3)$$

For mesh 4,

$$-I_1 - I_2 + 7I_4 - 2I_5 - 6 = 0 \text{ or}$$
$$6 = -I_1 - I_2 + 7I_4 - 2I_5 \qquad (4)$$

For mesh 5,

$$-I_2 - I_3 - 2I_4 + 8I_5 - 10 = 0 \text{ or}$$
$$10 = -I_2 - I_3 - 2I_4 + 8I_5 \qquad (5)$$

PROPRIETARY MATERIAL. © 2007 The McGraw-Hill Companies, Inc. All rights reserved. No part of this Manual may be displayed, reproduced or distributed in any form or by any means, without the prior written permission of the publisher, or used beyond the limited distribution to teachers and educators permitted by McGraw-Hill for their individual course preparation. If you are a student using this Manual, you are using it without permission.

Casting (1) to (5) in matrix form gives

$$\begin{pmatrix} 12 & -6 & 0 & 1 & 0 \\ -6 & 16 & -8 & -1 & -1 \\ 0 & -8 & 15 & 0 & -1 \\ -1 & -1 & 0 & 7 & -2 \\ 0 & -1 & -1 & -2 & 8 \end{pmatrix} \begin{pmatrix} I_1 \\ I_2 \\ I_3 \\ I_4 \\ I_5 \end{pmatrix} = \begin{pmatrix} 12 \\ 0 \\ 9 \\ 6 \\ 10 \end{pmatrix} \longrightarrow \quad AI = B$$

Using MATLAB we input:
Z=[12,-6,0,-1,0;-6,16,-8,-1,-1;0,-8,15,0,-1;-1,-1,0,7,-2;0,-1,-1,-2,8]
and V=[12;0;9;6;10]

This leads to

```
>> Z=[12,-6,0,-1,0;-6,16,-8,-1,-1;0,-8,15,0,-1;-1,-1,0,7,-2;0,-1,-1,-2,8]

Z =
   12   -6    0   -1    0
   -6   16   -8   -1   -1
    0   -8   15    0   -1
   -1   -1    0    7   -2
    0   -1   -1   -2    8

>> V=[12;0;9;6;10]

V =
   12
    0
    9
    6
   10

>> I=inv(Z)*V

I =
   2.1701
   1.9912
   1.8119
   2.0942
   2.2489
```

Thus,

I = **[2.17, 1.9912, 1.8119, 2.094, 2.249] A**.

PROPRIETARY MATERIAL. © 2007 The McGraw-Hill Companies, Inc. All rights reserved. No part of this Manual may be displayed, reproduced or distributed in any form or by any means, without the prior written permission of the publisher, or used beyond the limited distribution to teachers and educators permitted by McGraw-Hill for their individual course preparation. If you are a student using this Manual, you are using it without permission.

Chapter 3, Problem 66.

Write a set of mesh equations for the circuit in Fig. 3.110. Use MATLAB to determine the mesh currents.

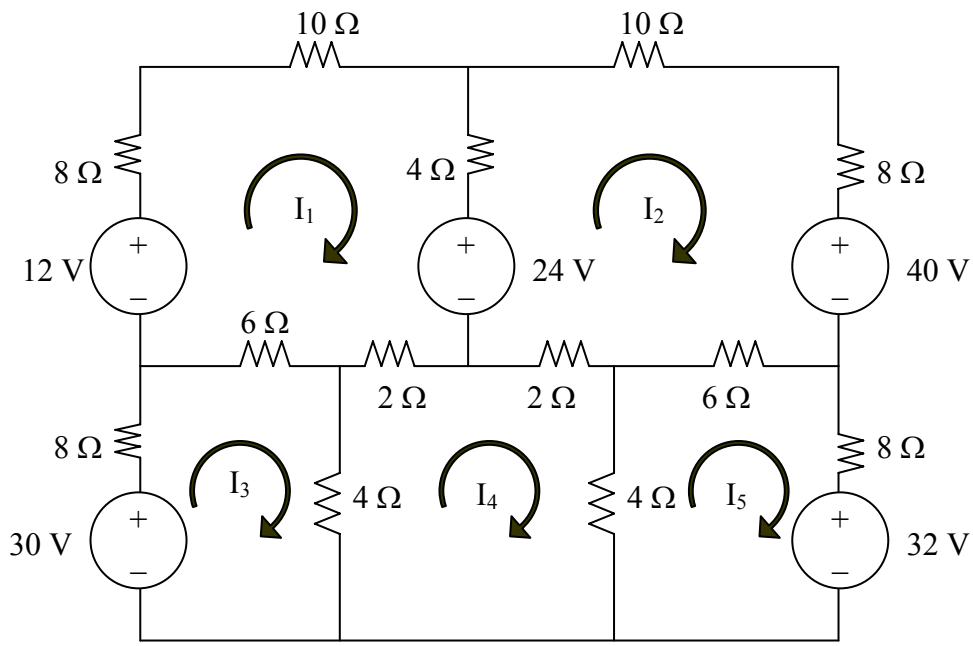

Figure 3.110 For Prob. 3.66.

Chapter 3, Solution 66

The mesh equations are obtained as follows.

$$-12 + 24 + 30I_1 - 4I_2 - 6I_3 - 2I_4 = 0$$

or

$$30I_1 - 4I_2 - 6I_3 - 2I_4 = -12 \qquad (1)$$

$$-24 + 40 - 4I_1 + 30I_2 - 2I_4 - 6I_5 = 0$$

or

$$-4I_1 + 30I_2 - 2I_4 - 6I_5 = -16 \qquad (2)$$

$$-6I_1 + 18I_3 - 4I_4 = 30 \qquad (3)$$

$$-2I_1 - 2I_2 - 4I_3 + 12I_4 - 4I_5 = 0 \qquad (4)$$

$$-6I_2 - 4I_4 + 18I_5 = -32 \qquad (5)$$

PROPRIETARY MATERIAL. © 2007 The McGraw-Hill Companies, Inc. All rights reserved. No part of this Manual may be displayed, reproduced or distributed in any form or by any means, without the prior written permission of the publisher, or used beyond the limited distribution to teachers and educators permitted by McGraw-Hill for their individual course preparation. If you are a student using this Manual, you are using it without permission.

Putting (1) to (5) in matrix form

$$\begin{bmatrix} 30 & -4 & -6 & -2 & 0 \\ -4 & 30 & 0 & -2 & -6 \\ -6 & 0 & 18 & -4 & 0 \\ -2 & -2 & -4 & 12 & -4 \\ 0 & -6 & 0 & -4 & 18 \end{bmatrix} \mathrm{I} = \begin{bmatrix} -12 \\ -16 \\ 30 \\ 0 \\ -32 \end{bmatrix}$$

$$\mathrm{ZI} = \mathrm{V}$$

Using MATLAB,

```
>> Z = [30,-4,-6,-2,0;
-4,30,0,-2,-6;
-6,0,18,-4,0;
-2,-2,-4,12,-4;
0,-6,0,-4,18]

Z =
   30   -4   -6   -2    0
   -4   30    0   -2   -6
   -6    0   18   -4    0
   -2   -2   -4   12   -4
    0   -6    0   -4   18

>> V = [-12,-16,30,0,-32]'

V =
  -12
  -16
   30
    0
  -32

>> I = inv(Z)*V

I =
```

-0.2779 A
-1.0488 A
1.4682 A
-0.4761 A
-2.2332 A

PROPRIETARY MATERIAL. © 2007 The McGraw-Hill Companies, Inc. All rights reserved. No part of this Manual may be displayed, reproduced or distributed in any form or by any means, without the prior written permission of the publisher, or used beyond the limited distribution to teachers and educators permitted by McGraw-Hill for their individual course preparation. If you are a student using this Manual, you are using it without permission.

Chapter 3, Problem 67.

Obtain the node-voltage equations for the circuit in Fig. 3.111 by inspection. Then solve for V_o.

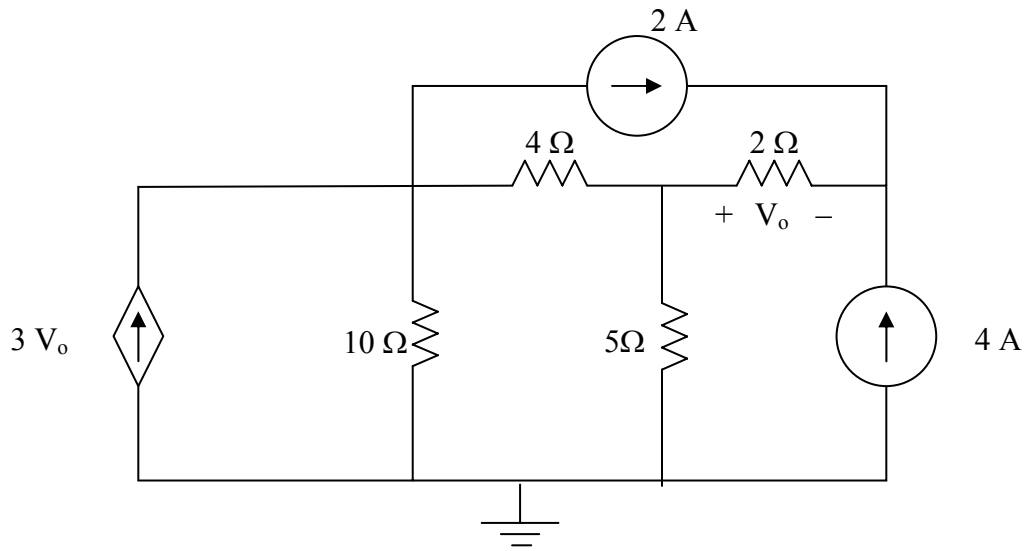

Figure 3.111 For Prob. 3.67.

Chapter 3, Solution 67

Consider the circuit below.

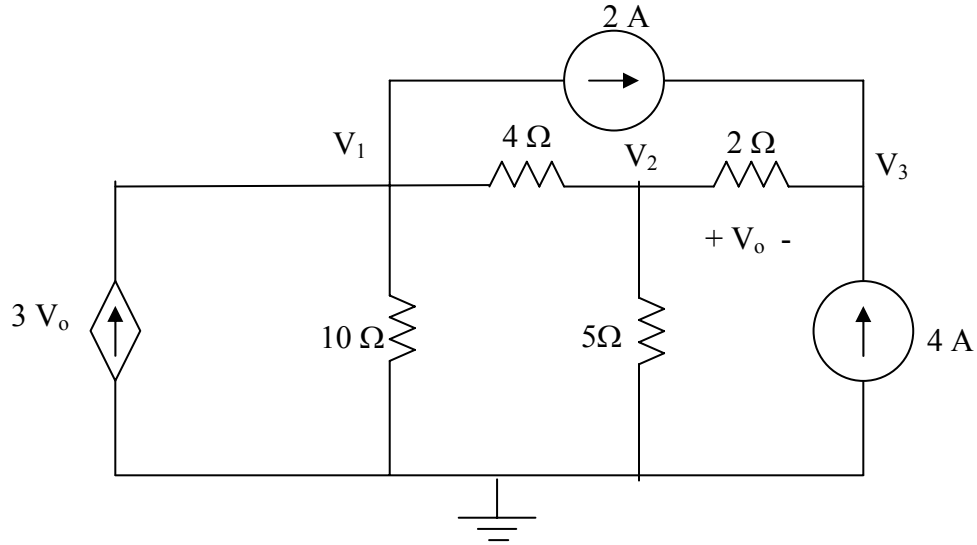

$$\begin{bmatrix} 0.35 & -0.25 & 0 \\ -0.25 & 0.95 & -0.5 \\ 0 & -0.5 & 0.5 \end{bmatrix} V = \begin{bmatrix} V_o \\ 0 \\ 6 \end{bmatrix}$$

PROPRIETARY MATERIAL. © 2007 The McGraw-Hill Companies, Inc. All rights reserved. No part of this Manual may be displayed, reproduced or distributed in any form or by any means, without the prior written permission of the publisher, or used beyond the limited distribution to teachers and educators permitted by McGraw-Hill for their individual course preparation. If you are a student using this Manual, you are using it without permission.

Since we actually have four unknowns and only three equations, we need a constraint equation.

$$V_o = V_2 - V_3$$

Substituting this back into the matrix equation, the first equation becomes,

$$0.35V_1 - 3.25V_2 + 3V_3 = -2$$

This now results in the following matrix equation,

$$\begin{bmatrix} 0.35 & -3.25 & 3 \\ -0.25 & 0.95 & -0.5 \\ 0 & -0.5 & 0.5 \end{bmatrix} V = \begin{bmatrix} -2 \\ 0 \\ 6 \end{bmatrix}$$

Now we can use MATLAB to solve for V.

```
>> Y=[0.35,-3.25,3;-0.25,0.95,-0.5;0,-0.5,0.5]

Y =
    0.3500   -3.2500    3.0000
   -0.2500    0.9500   -0.5000
         0   -0.5000    0.5000

>> I=[-2,0,6]'

I =
    -2
     0
     6

>> V=inv(Y)*I

V =
 -164.2105
  -77.8947
  -65.8947
```

$V_o = V_2 - V_3 = -77.89 + 65.89 =$ **<u>–12 V</u>**.

Let us now do a quick check at node 1.

$$-3(-12) + 0.1(-164.21) + 0.25(-164.21+77.89) + 2 =$$
$$+36 - 16.421 - 21.58 + 2 = -0.001;\ \text{answer checks!}$$

PROPRIETARY MATERIAL. © 2007 The McGraw-Hill Companies, Inc. All rights reserved. No part of this Manual may be displayed, reproduced or distributed in any form or by any means, without the prior written permission of the publisher, or used beyond the limited distribution to teachers and educators permitted by McGraw-Hill for their individual course preparation. If you are a student using this Manual, you are using it without permission.

Chapter 3, Problem 68.

Find the voltage V_o in the circuit of Fig. 3.112.

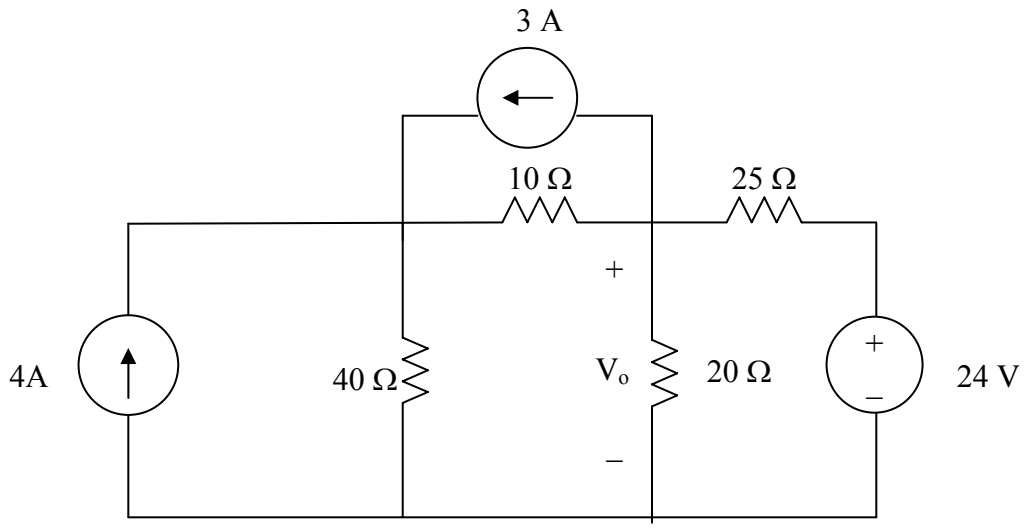

Figure 3.112 For Prob. 3.68.

Chapter 3, Solution 68

Consider the circuit below. There are two non-reference nodes.

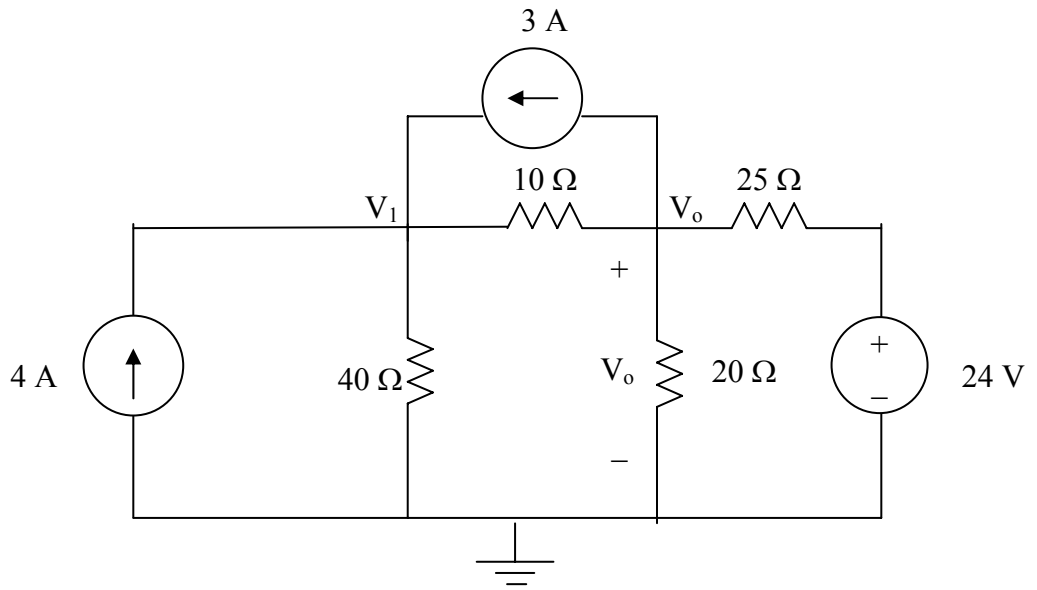

PROPRIETARY MATERIAL. © 2007 The McGraw-Hill Companies, Inc. All rights reserved. No part of this Manual may be displayed, reproduced or distributed in any form or by any means, without the prior written permission of the publisher, or used beyond the limited distribution to teachers and educators permitted by McGraw-Hill for their individual course preparation. If you are a student using this Manual, you are using it without permission.

$$\begin{bmatrix} 0.125 & -0.1 \\ -0.1 & 0.19 \end{bmatrix} V = \begin{bmatrix} +4+3 \\ -3+24/25 \end{bmatrix} = \begin{bmatrix} 7 \\ -2.04 \end{bmatrix}$$

Using MATLAB, we get,

```
>> Y=[0.125,-0.1;-0.1,0.19]

Y =

    0.1250   -0.1000
   -0.1000    0.1900

>> I=[7,-2.04]'

I =

    7.0000
   -2.0400

>> V=inv(Y)*I

V =

   81.8909
   32.3636
```

Thus, V_o = **<u>32.36 V</u>**.

We can perform a simple check at node V_o,

3 + 0.1(32.36–81.89) + 0.05(32.36) + 0.04(32.36–24) =
3 – 4.953 + 1.618 + 0.3344 = – 0.0004; answer checks!

PROPRIETARY MATERIAL. © 2007 The McGraw-Hill Companies, Inc. All rights reserved. No part of this Manual may be displayed, reproduced or distributed in any form or by any means, without the prior written permission of the publisher, or used beyond the limited distribution to teachers and educators permitted by McGraw-Hill for their individual course preparation. If you are a student using this Manual, you are using it without permission.

Chapter 3, Problem 69.

For the circuit in Fig. 3.113, write the node voltage equations by inspection.

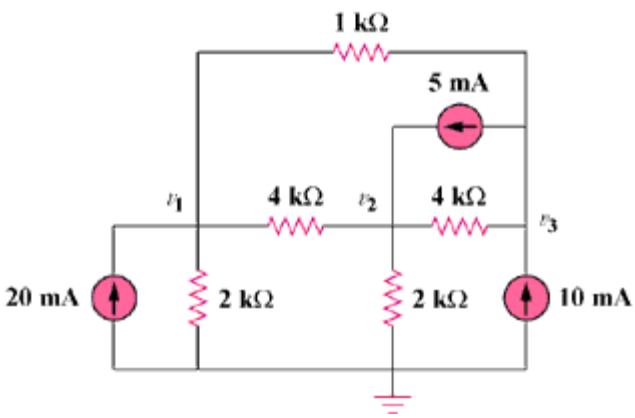

Figure 3.113

Chapter 3, Solution 69

Assume that all conductances are in mS, all currents are in mA, and all voltages are in volts.

$G_{11} = (1/2) + (1/4) + (1/1) = 1.75$, $G_{22} = (1/4) + (1/4) + (1/2) = 1$,
$G_{33} = (1/1) + (1/4) = 1.25$, $G_{12} = -1/4 = -0.25$, $G_{13} = -1/1 = -1$,
$G_{21} = -0.25$, $G_{23} = -1/4 = -0.25$, $G_{31} = -1$, $G_{32} = -0.25$

$i_1 = 20$, $i_2 = 5$, and $i_3 = 10 - 5 = 5$

The node-voltage equations are:

$$\begin{bmatrix} 1.75 & -0.25 & -1 \\ -0.25 & 1 & -0.25 \\ -1 & -0.25 & 1.25 \end{bmatrix} \begin{bmatrix} v_1 \\ v_2 \\ v_3 \end{bmatrix} = \begin{bmatrix} 20 \\ 5 \\ 5 \end{bmatrix}$$

PROPRIETARY MATERIAL. © 2007 The McGraw-Hill Companies, Inc. All rights reserved. No part of this Manual may be displayed, reproduced or distributed in any form or by any means, without the prior written permission of the publisher, or used beyond the limited distribution to teachers and educators permitted by McGraw-Hill for their individual course preparation. If you are a student using this Manual, you are using it without permission.

Chapter 3, Problem 70.

Write the node-voltage equations by inspection and then determine values of V_1 and V_2 in the circuit in Fig. 3.114.

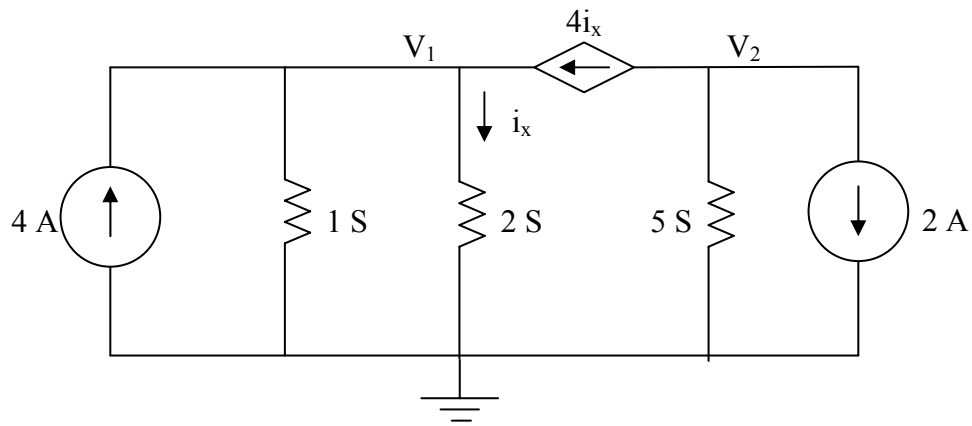

Figure 3.114 For Prob. 3.70.

Chapter 3, Solution 70

$$\begin{bmatrix} 3 & 0 \\ 0 & 5 \end{bmatrix} V = \begin{bmatrix} 4I_x + 4 \\ -4I_x - 2 \end{bmatrix}$$

With two equations and three unknowns, we need a constraint equation,

$I_x = 2V_1$, thus the matrix equation becomes,

$$\begin{bmatrix} -5 & 0 \\ 8 & 5 \end{bmatrix} V = \begin{bmatrix} 4 \\ -2 \end{bmatrix}$$

This results in $V_1 = 4/(-5) =$ **–0.8V** and
$V_2 = [-8(-0.8) - 2]/5 = [6.4 - 2]/5 =$ **0.88 V**.

PROPRIETARY MATERIAL. © 2007 The McGraw-Hill Companies, Inc. All rights reserved. No part of this Manual may be displayed, reproduced or distributed in any form or by any means, without the prior written permission of the publisher, or used beyond the limited distribution to teachers and educators permitted by McGraw-Hill for their individual course preparation. If you are a student using this Manual, you are using it without permission.

Chapter 3, Problem 71.

Write the mesh-current equations for the circuit in Fig. 3.115. Next, determine the values of I_1, I_2, and I_3.

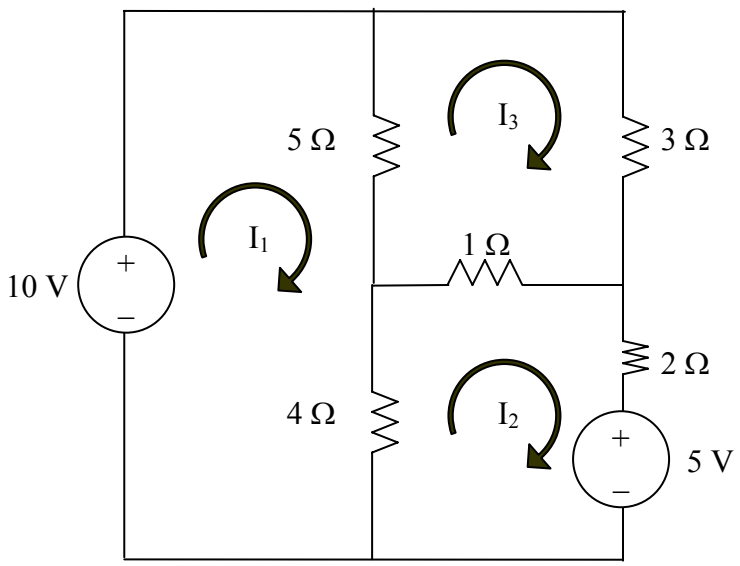

Figure 3.115 For Prob. 3.71.

PROPRIETARY MATERIAL. © 2007 The McGraw-Hill Companies, Inc. All rights reserved. No part of this Manual may be displayed, reproduced or distributed in any form or by any means, without the prior written permission of the publisher, or used beyond the limited distribution to teachers and educators permitted by McGraw-Hill for their individual course preparation. If you are a student using this Manual, you are using it without permission.

Chapter 3, Solution 71

$$\begin{bmatrix} 9 & -4 & -5 \\ -4 & 7 & -1 \\ -5 & -1 & 9 \end{bmatrix} I = \begin{bmatrix} 10 \\ -5 \\ 0 \end{bmatrix}$$

We can now use MATLAB solve for our currents.

```
>> R=[9,-4,-5;-4,7,-1;-5,-1,9]

R =

     9    -4    -5
    -4     7    -1
    -5    -1     9

>> V=[10,-5,0]'

V =

    10
    -5
     0

>> I=inv(R)*V

I =
```

2.085 A
653.3 mA
1.2312 A

PROPRIETARY MATERIAL. © 2007 The McGraw-Hill Companies, Inc. All rights reserved. No part of this Manual may be displayed, reproduced or distributed in any form or by any means, without the prior written permission of the publisher, or used beyond the limited distribution to teachers and educators permitted by McGraw-Hill for their individual course preparation. If you are a student using this Manual, you are using it without permission.

Chapter 3, Problem 72.

By inspection, write the mesh-current equations for the circuit in Fig. 3.116.

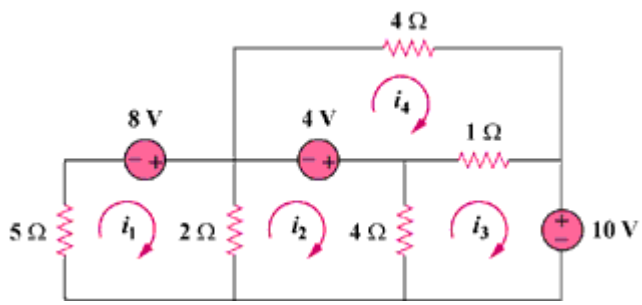

Figure 3.116

Chapter 3, Solution 72

$R_{11} = 5 + 2 = 7$, $R_{22} = 2 + 4 = 6$, $R_{33} = 1 + 4 = 5$, $R_{44} = 1 + 4 = 5$, $R_{12} = -2$, $R_{13} = 0 = R_{14}$, $R_{21} = -2$, $R_{23} = -4$, $R_{24} = 0$, $R_{31} = 0$, $R_{32} = -4$, $R_{34} = -1$, $R_{41} = 0 = R_{42}$, $R_{43} = -1$, we note that $R_{ij} = R_{ji}$ for all i not equal to j.

$v_1 = 8$, $v_2 = 4$, $v_3 = -10$, and $v_4 = -4$

Hence the mesh-current equations are:

$$\begin{bmatrix} 7 & -2 & 0 & 0 \\ -2 & 6 & -4 & 0 \\ 0 & -4 & 5 & -1 \\ 0 & 0 & -1 & 5 \end{bmatrix} \begin{bmatrix} i_1 \\ i_2 \\ i_3 \\ i_4 \end{bmatrix} = \begin{bmatrix} 8 \\ 4 \\ -10 \\ -4 \end{bmatrix}$$

PROPRIETARY MATERIAL. © 2007 The McGraw-Hill Companies, Inc. All rights reserved. No part of this Manual may be displayed, reproduced or distributed in any form or by any means, without the prior written permission of the publisher, or used beyond the limited distribution to teachers and educators permitted by McGraw-Hill for their individual course preparation. If you are a student using this Manual, you are using it without permission.

Chapter 3, Problem 73.

Write the mesh-current equations for the circuit in Fig. 3.117.

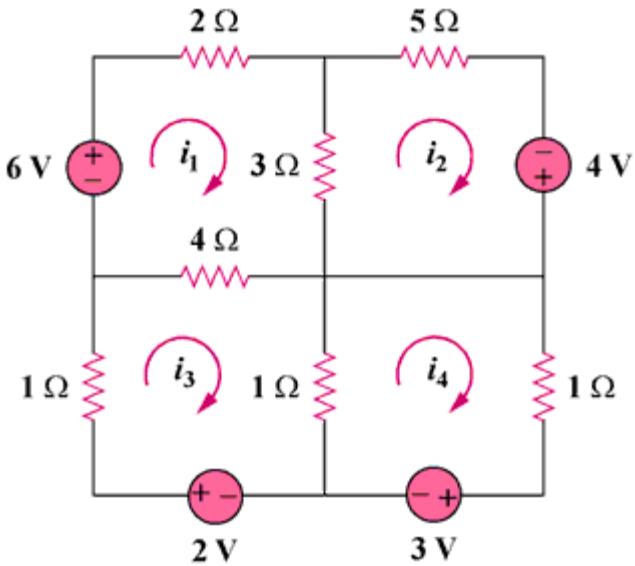

Figure 3.117

Chapter 3, Solution 73

$R_{11} = 2 + 3 + 4 = 9$, $R_{22} = 3 + 5 = 8$, $R_{33} = 1 + 1 + 4 = 6$, $R_{44} = 1 + 1 = 2$,
$R_{12} = -3$, $R_{13} = -4$, $R_{14} = 0$, $R_{23} = 0$, $R_{24} = 0$, $R_{34} = -1$

$v_1 = 6$, $v_2 = 4$, $v_3 = 2$, and $v_4 = -3$

Hence,

$$\begin{bmatrix} 9 & -3 & -4 & 0 \\ -3 & 8 & 0 & 0 \\ -4 & 0 & 6 & -1 \\ 0 & 0 & -1 & 2 \end{bmatrix} \begin{bmatrix} i_1 \\ i_2 \\ i_3 \\ i_4 \end{bmatrix} = \begin{bmatrix} 6 \\ 4 \\ 2 \\ -3 \end{bmatrix}$$

PROPRIETARY MATERIAL. © 2007 The McGraw-Hill Companies, Inc. All rights reserved. No part of this Manual may be displayed, reproduced or distributed in any form or by any means, without the prior written permission of the publisher, or used beyond the limited distribution to teachers and educators permitted by McGraw-Hill for their individual course preparation. If you are a student using this Manual, you are using it without permission.

Chapter 3, Problem 74.

By inspection, obtain the mesh-current equations for the circuit in Fig. 3.11.

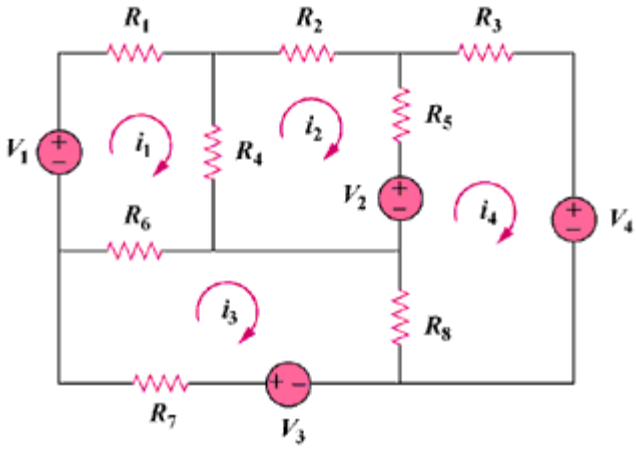

Figure 3.118

Chapter 3, Solution 74

$R_{11} = R_1 + R_4 + R_6$, $R_{22} = R_2 + R_4 + R_5$, $R_{33} = R_6 + R_7 + R_8$,
$R_{44} = R_3 + R_5 + R_8$, $R_{12} = -R_4$, $R_{13} = -R_6$, $R_{14} = 0$, $R_{23} = 0$,
$R_{24} = -R_5$, $R_{34} = -R_8$, again, we note that $R_{ij} = R_{ji}$ for all i not equal to j.

The input voltage vector is = $\begin{bmatrix} V_1 \\ -V_2 \\ V_3 \\ -V_4 \end{bmatrix}$

$$\begin{bmatrix} R_1 + R_4 + R_6 & -R_4 & -R_6 & 0 \\ -R_4 & R_2 + R_4 + R_5 & 0 & -R_5 \\ -R_6 & 0 & R_6 + R_7 + R_8 & -R_8 \\ 0 & -R_5 & -R_8 & R_3 + R_5 + R_8 \end{bmatrix} \begin{bmatrix} i_1 \\ i_2 \\ i_3 \\ i_4 \end{bmatrix} = \begin{bmatrix} V_1 \\ -V_2 \\ V_3 \\ -V_4 \end{bmatrix}$$

PROPRIETARY MATERIAL. © 2007 The McGraw-Hill Companies, Inc. All rights reserved. No part of this Manual may be displayed, reproduced or distributed in any form or by any means, without the prior written permission of the publisher, or used beyond the limited distribution to teachers and educators permitted by McGraw-Hill for their individual course preparation. If you are a student using this Manual, you are using it without permission.

Chapter 3, Problem 75.

Use *PSpice* to solve Prob. 3.58.

Chapter 3, Problem 58

Find $\mathbf{i_1}$, $\boldsymbol{i_2}$, and $\boldsymbol{i_3}$ the circuit in Fig. 3.103.

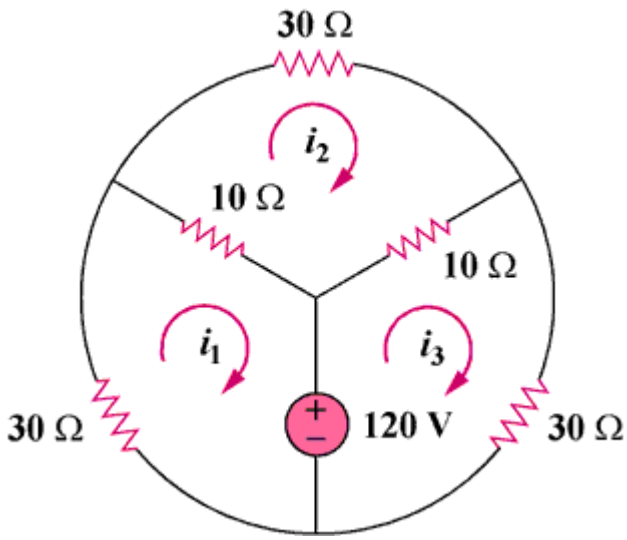

Figure 3.103

PROPRIETARY MATERIAL. © 2007 The McGraw-Hill Companies, Inc. All rights reserved. No part of this Manual may be displayed, reproduced or distributed in any form or by any means, without the prior written permission of the publisher, or used beyond the limited distribution to teachers and educators permitted by McGraw-Hill for their individual course preparation. If you are a student using this Manual, you are using it without permission.

Chapter 3, Solution 75

```
* Schematics Netlist *

R_R4          $N_0002 $N_0001  30
R_R2          $N_0001 $N_0003  10
R_R1          $N_0005 $N_0004  30
R_R3          $N_0003 $N_0004  10
R_R5          $N_0006 $N_0004  30
V_V4          $N_0003 0 120V
v_V3          $N_0005 $N_0001 0
v_V2          0 $N_0006 0
v_V1          0 $N_0002 0
```

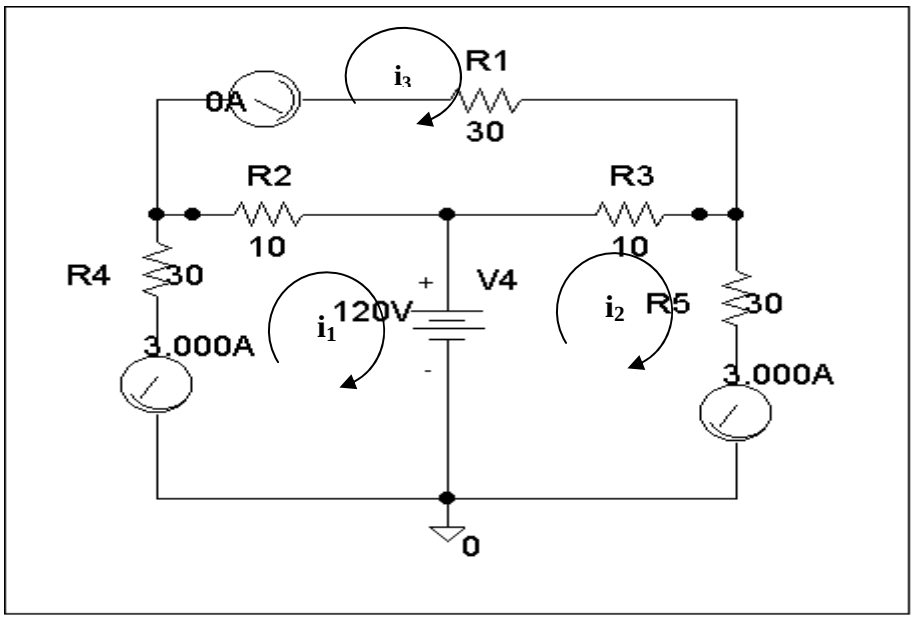

Clearly, i_1 = **–3 amps**, i_2 = **0 amps**, and i_3 = **3 amps**, which agrees with the answers in Problem 3.44.

Chapter 3, Problem 76.

PROPRIETARY MATERIAL. © 2007 The McGraw-Hill Companies, Inc. All rights reserved. No part of this Manual may be displayed, reproduced or distributed in any form or by any means, without the prior written permission of the publisher, or used beyond the limited distribution to teachers and educators permitted by McGraw-Hill for their individual course preparation. If you are a student using this Manual, you are using it without permission.

Use *PSpice* to solve Prob. 3.27.

Chapter 3, Problem 27

Use nodal analysis to determine voltages $\boldsymbol{v_1}$, $\boldsymbol{v_2}$, and $\boldsymbol{v_3}$ in the circuit in Fig. 3.76.

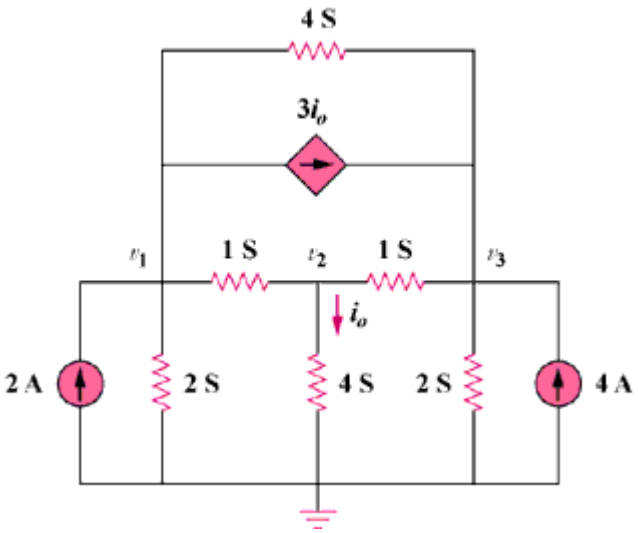

Figure 3.76

Chapter 3, Solution 76

PROPRIETARY MATERIAL. © 2007 The McGraw-Hill Companies, Inc. All rights reserved. No part of this Manual may be displayed, reproduced or distributed in any form or by any means, without the prior written permission of the publisher, or used beyond the limited distribution to teachers and educators permitted by McGraw-Hill for their individual course preparation. If you are a student using this Manual, you are using it without permission.

```
* Schematics Netlist *

I_I2          0 $N_0001 DC 4A
R_R1          $N_0002 $N_0001  0.25
R_R3          $N_0003 $N_0001  1
R_R2          $N_0002 $N_0003  1
F_F1          $N_0002 $N_0001 VF_F1 3
VF_F1         $N_0003 $N_0004 0V
R_R4          0 $N_0002  0.5
R_R6          0 $N_0001  0.5
I_I1          0 $N_0002 DC 2A
R_R5          0 $N_0004  0.25
```

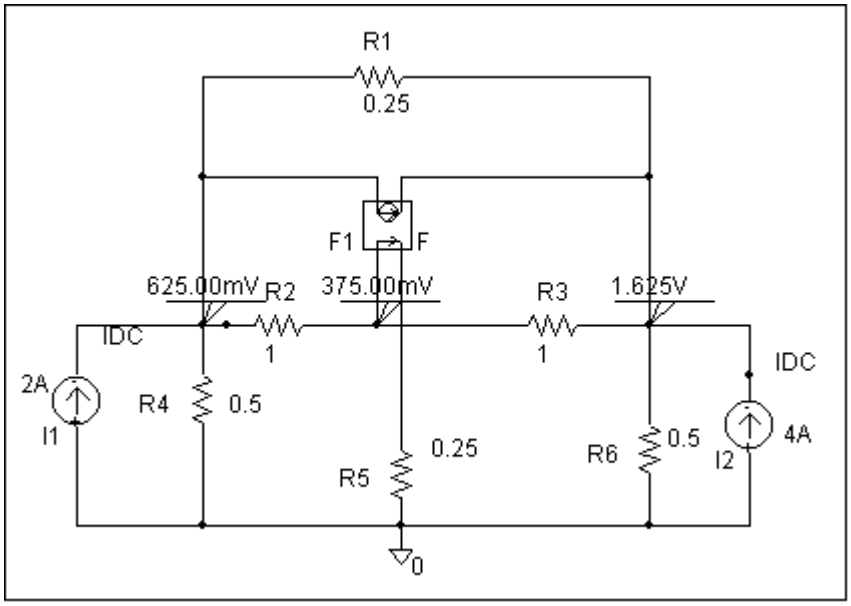

Clearly, v_1 = **625 mVolts**, v_2 = **375 mVolts**, and v_3 = **1.625 volts**, which agrees with the solution obtained in Problem 3.27.

Chapter 3, Problem 77.

Solve for V_1 and V_2 in the circuit of Fig. 3.119 using PSpice.

PROPRIETARY MATERIAL. © 2007 The McGraw-Hill Companies, Inc. All rights reserved. No part of this Manual may be displayed, reproduced or distributed in any form or by any means, without the prior written permission of the publisher, or used beyond the limited distribution to teachers and educators permitted by McGraw-Hill for their individual course preparation. If you are a student using this Manual, you are using it without permission.

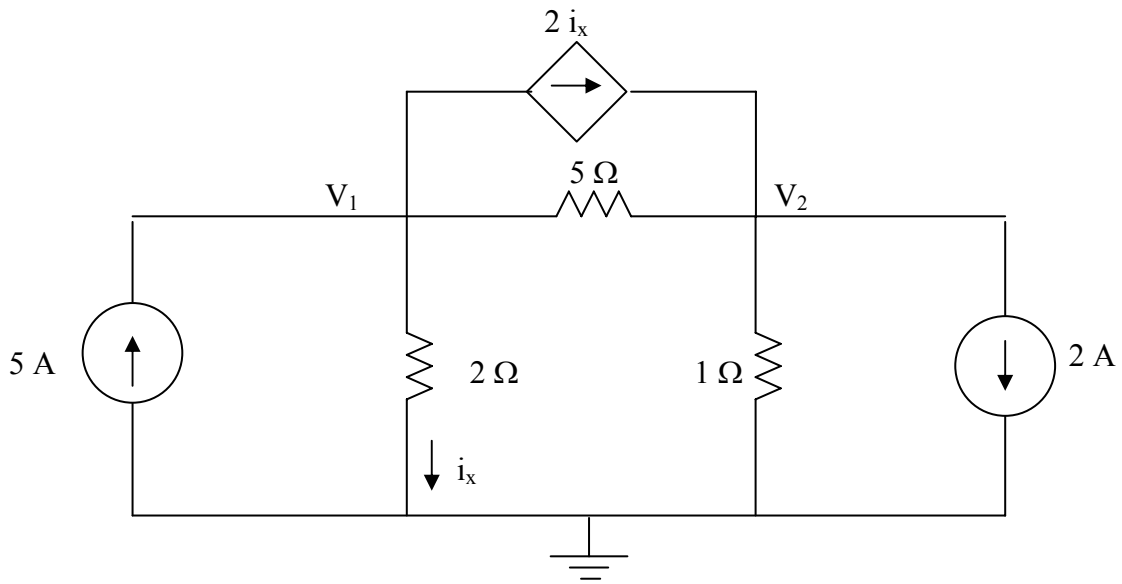

Figure 3.119 For Prob. 3.77.

Chapter 3, Solution 77

PROPRIETARY MATERIAL. © 2007 The McGraw-Hill Companies, Inc. All rights reserved. No part of this Manual may be displayed, reproduced or distributed in any form or by any means, without the prior written permission of the publisher, or used beyond the limited distribution to teachers and educators permitted by McGraw-Hill for their individual course preparation. If you are a student using this Manual, you are using it without permission.

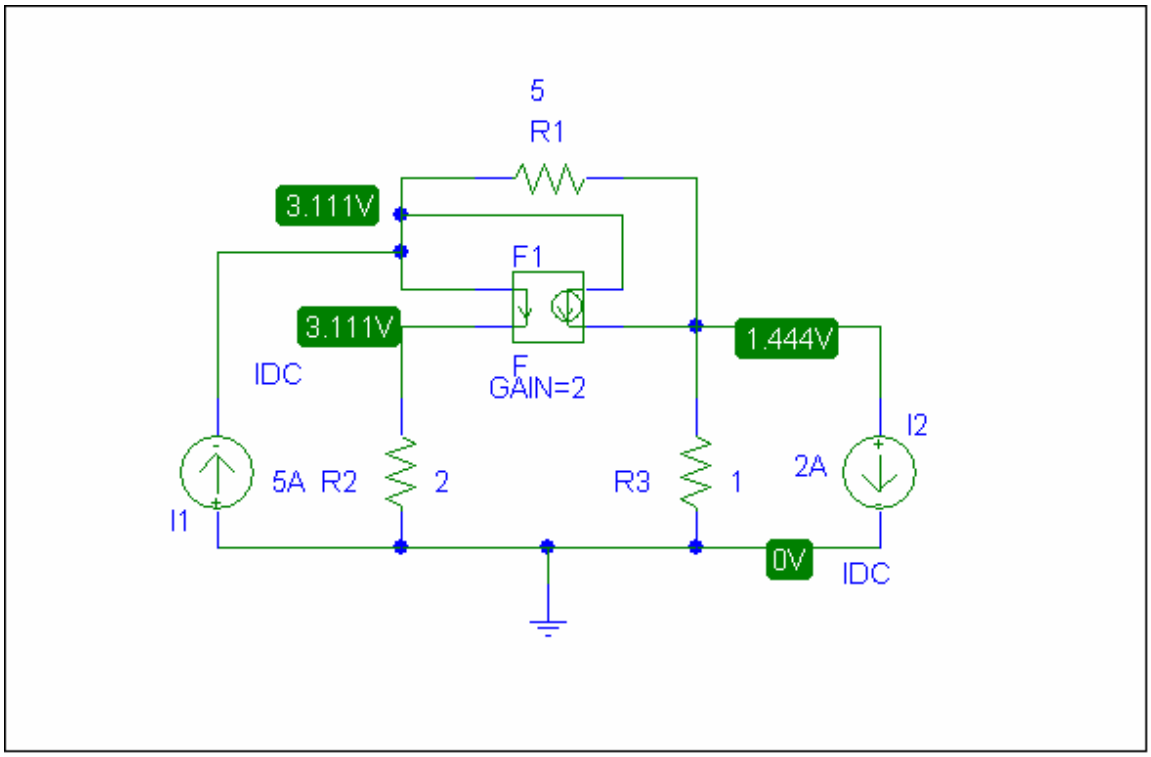

As a check we can write the nodal equations,

$$\begin{bmatrix} 1.7 & -0.2 \\ -1.2 & 1.2 \end{bmatrix} V = \begin{bmatrix} 5 \\ -2 \end{bmatrix}$$

Solving this leads to V_1 = **3.111 V** and V_2 = **1.4444 V**. The answer checks!

Chapter 3, Problem 78.

PROPRIETARY MATERIAL. © 2007 The McGraw-Hill Companies, Inc. All rights reserved. No part of this Manual may be displayed, reproduced or distributed in any form or by any means, without the prior written permission of the publisher, or used beyond the limited distribution to teachers and educators permitted by McGraw-Hill for their individual course preparation. If you are a student using this Manual, you are using it without permission.

Solve Prob. 3.20 using *PSpice*.

Chapter 3, Problem 20

For the circuit in Fig. 3.69, find V_1, V_2, and V_3 using nodal analysis.

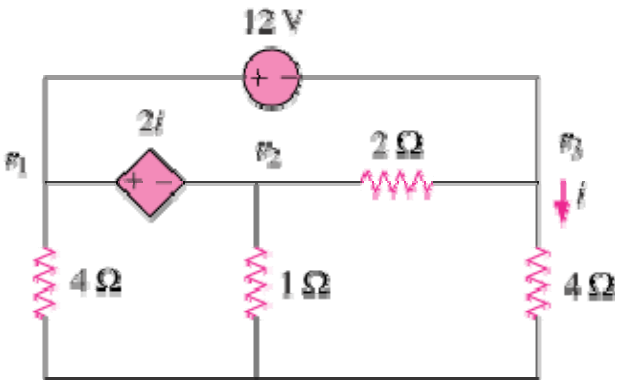

Figure 3.69

Chapter 3, Solution 78

PROPRIETARY MATERIAL. © 2007 The McGraw-Hill Companies, Inc. All rights reserved. No part of this Manual may be displayed, reproduced or distributed in any form or by any means, without the prior written permission of the publisher, or used beyond the limited distribution to teachers and educators permitted by McGraw-Hill for their individual course preparation. If you are a student using this Manual, you are using it without permission.

The schematic is shown below. When the circuit is saved and simulated the node voltages are displaced on the pseudocomponents as shown. Thus,

$\underline{V_1 = -3\text{V}, \quad V_2 = 4.5\text{V}, V_3 = -15\text{V}}$,

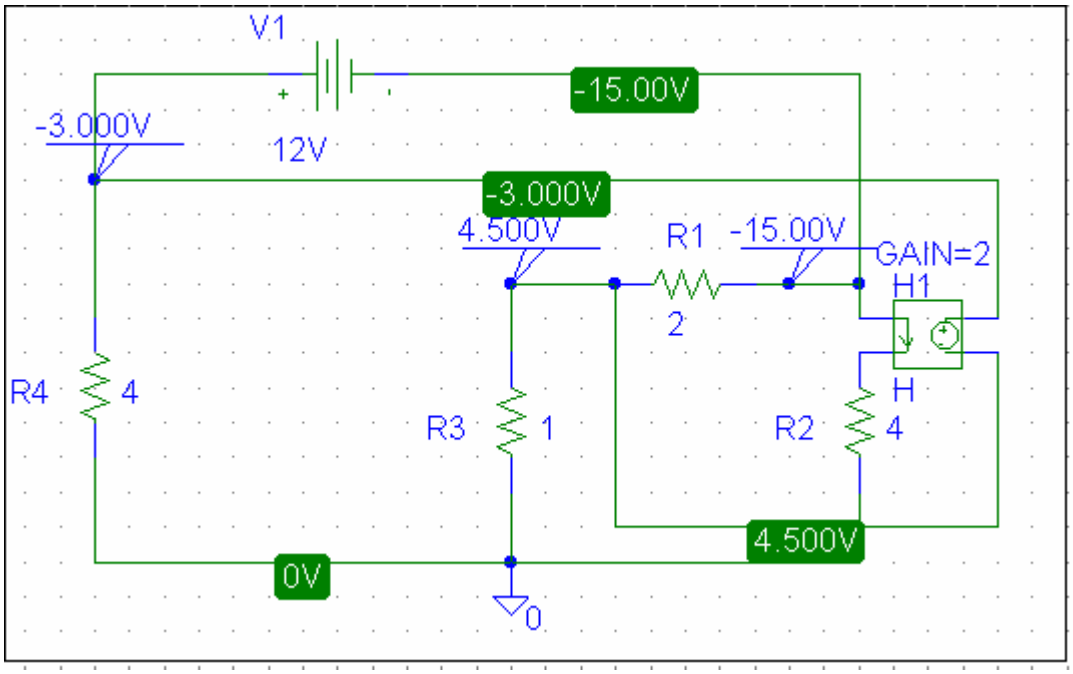

Chapter 3, Problem 79.
Rework Prob. 3.28 using *PSpice*.

PROPRIETARY MATERIAL. © 2007 The McGraw-Hill Companies, Inc. All rights reserved. No part of this Manual may be displayed, reproduced or distributed in any form or by any means, without the prior written permission of the publisher, or used beyond the limited distribution to teachers and educators permitted by McGraw-Hill for their individual course preparation. If you are a student using this Manual, you are using it without permission.

Chapter 3, Problem 28

Use MATLAB to find the voltages at nodes a, b, c, and d in the circuit of Fig. 3.77.

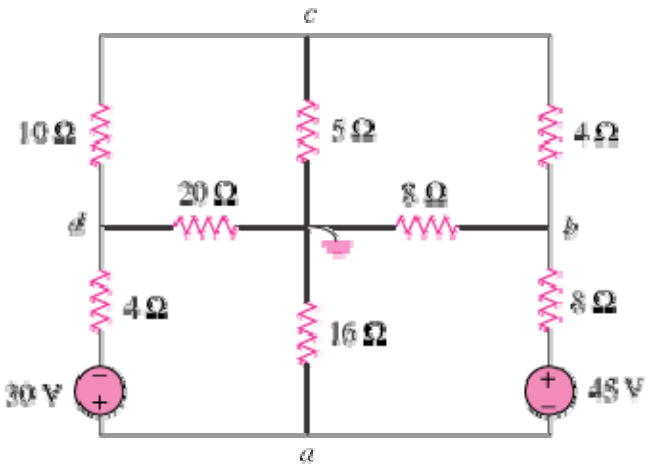

Figure 3.77

Chapter 3, Solution 79

The schematic is shown below. When the circuit is saved and simulated, we obtain the node voltages as displaced. Thus,

$V_a = -5.278\text{ V},\quad V_b = 10.28\text{ V},\quad V_c = 0.6944\text{ V},\quad V_d = -26.88\text{ V}$

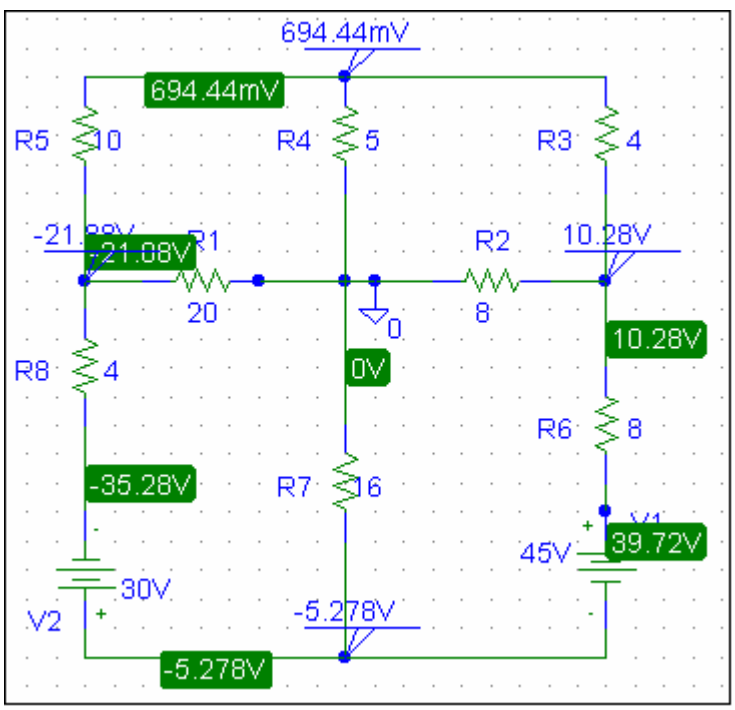

Chapter 3, Problem 80.

PROPRIETARY MATERIAL. © 2007 The McGraw-Hill Companies, Inc. All rights reserved. No part of this Manual may be displayed, reproduced or distributed in any form or by any means, without the prior written permission of the publisher, or used beyond the limited distribution to teachers and educators permitted by McGraw-Hill for their individual course preparation. If you are a student using this Manual, you are using it without permission.

Find the nodal voltage v_1 through v_4 in the circuit in Fig. 3.120 using *PSpice*.

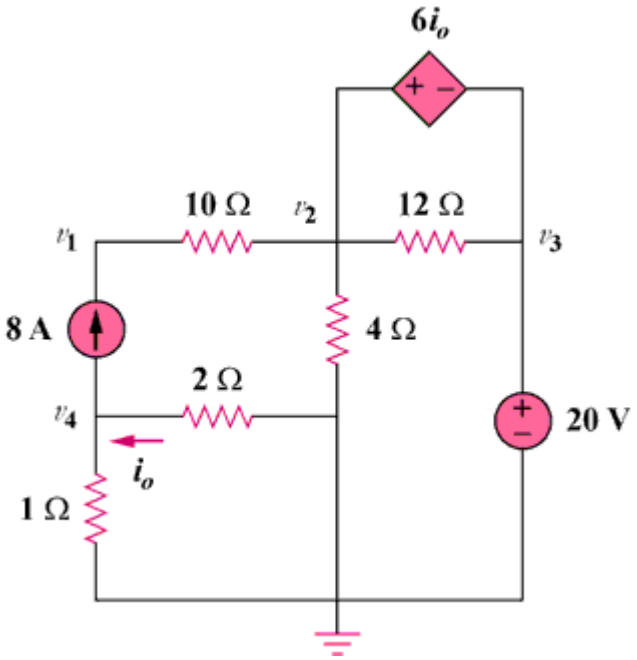

Figure 3.120

Chapter 3, Solution 80

PROPRIETARY MATERIAL. © 2007 The McGraw-Hill Companies, Inc. All rights reserved. No part of this Manual may be displayed, reproduced or distributed in any form or by any means, without the prior written permission of the publisher, or used beyond the limited distribution to teachers and educators permitted by McGraw-Hill for their individual course preparation. If you are a student using this Manual, you are using it without permission.

```
* Schematics Netlist *

H_H1          $N_0002 $N_0003 VH_H1 6
VH_H1         0 $N_0001 0V
I_I1          $N_0004 $N_0005 DC 8A
V_V1          $N_0002 0 20V
R_R4          0 $N_0003  4
R_R1          $N_0005 $N_0003  10
R_R2          $N_0003 $N_0002  12
R_R5          0 $N_0004  1
R_R3          $N_0004 $N_0001  2
```

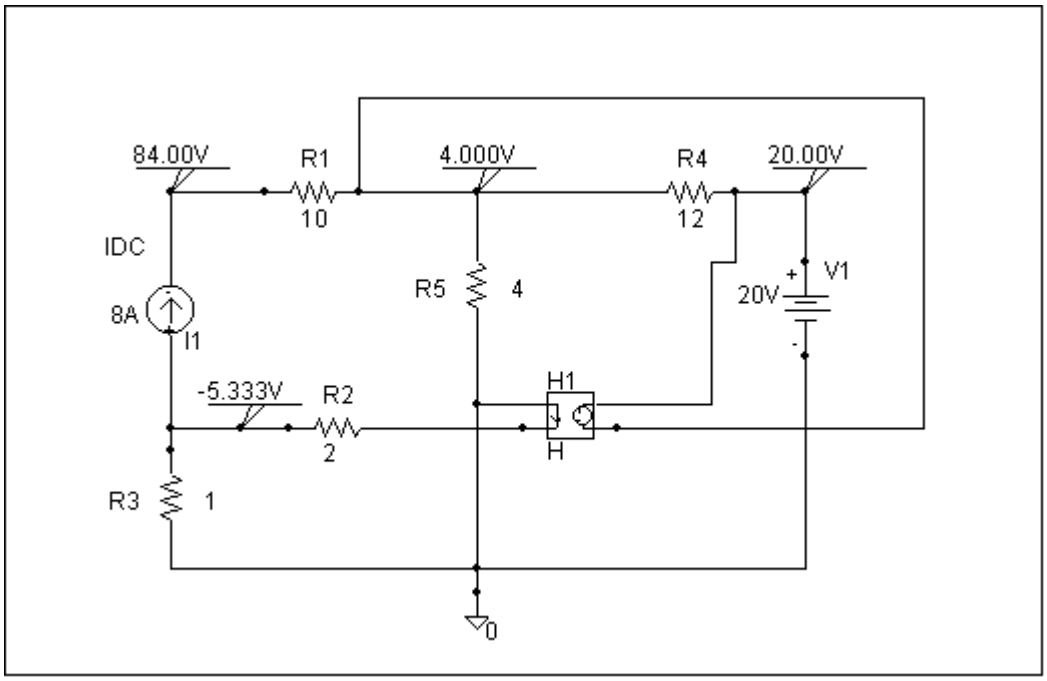

Clearly, v_1 = **84 volts**, v_2 = **4 volts**, v_3 = **20 volts**, and v_4 = **-5.333 volts**

Chapter 3, Problem 81.

Use *PSpice* to solve the problem in Example 3.4

PROPRIETARY MATERIAL. © 2007 The McGraw-Hill Companies, Inc. All rights reserved. No part of this Manual may be displayed, reproduced or distributed in any form or by any means, without the prior written permission of the publisher, or used beyond the limited distribution to teachers and educators permitted by McGraw-Hill for their individual course preparation. If you are a student using this Manual, you are using it without permission.

Example 3.4

Find the node voltages in the circuit of Fig. 3.12.

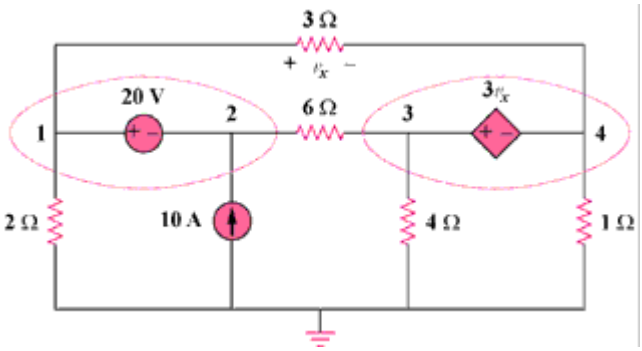

Figure 3.12

Chapter 3, Solution 81

PROPRIETARY MATERIAL. © 2007 The McGraw-Hill Companies, Inc. All rights reserved. No part of this Manual may be displayed, reproduced or distributed in any form or by any means, without the prior written permission of the publisher, or used beyond the limited distribution to teachers and educators permitted by McGraw-Hill for their individual course preparation. If you are a student using this Manual, you are using it without permission.

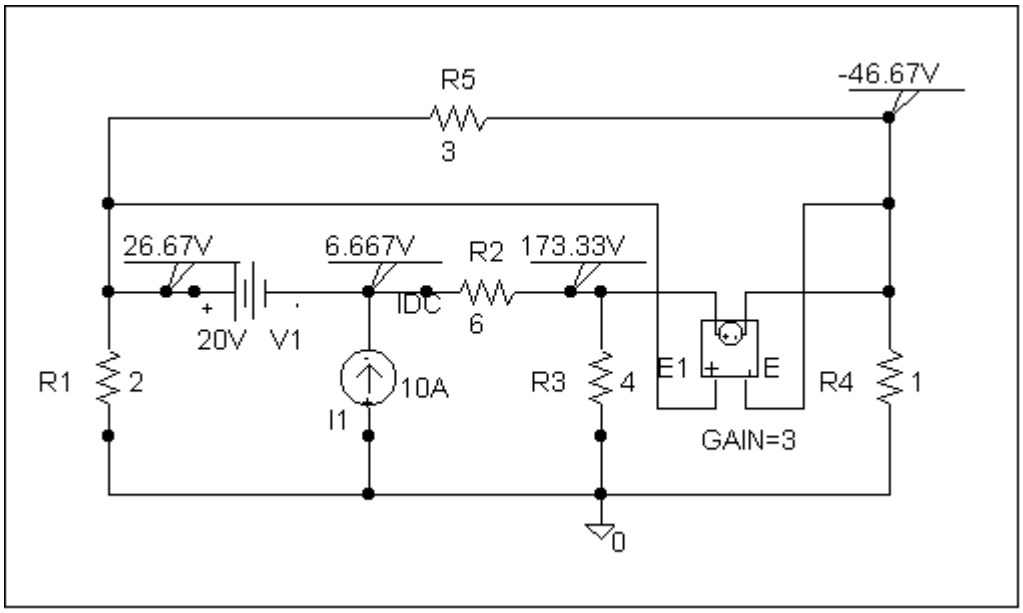

Clearly, v_1 = **26.67 volts**, v_2 = **6.667 volts**, v_3 = **173.33 volts**, and v_4 = **-46.67 volts** which agrees with the results of Example 3.4.

This is the netlist for this circuit.

```
* Schematics Netlist *

R_R1          0 $N_0001  2
R_R2          $N_0003 $N_0002  6
R_R3          0 $N_0002  4
R_R4          0 $N_0004  1
R_R5          $N_0001 $N_0004  3
I_I1          0 $N_0003 DC 10A
V_V1          $N_0001 $N_0003 20V
E_E1          $N_0002 $N_0004 $N_0001 $N_0004 3
```

Chapter 3, Problem 82.

If the Schematics Netlist for a network is as follows, draw the network.

PROPRIETARY MATERIAL. © 2007 The McGraw-Hill Companies, Inc. All rights reserved. No part of this Manual may be displayed, reproduced or distributed in any form or by any means, without the prior written permission of the publisher, or used beyond the limited distribution to teachers and educators permitted by McGraw-Hill for their individual course preparation. If you are a student using this Manual, you are using it without permission.

```
R_R1    1  2  2K
R_R2    2  0  4K
R_R3    2  0  8K
R_R4    3  4  6K
R_R5    1  3  3K
V_VS    4  0  DC      100
I_IS    0  1  DC      4
F_F1    1  3  VF_F1   2
VF_F1   5  0  0V
E_E1    3  2  1       3     3
```

Chapter 3, Solution 82

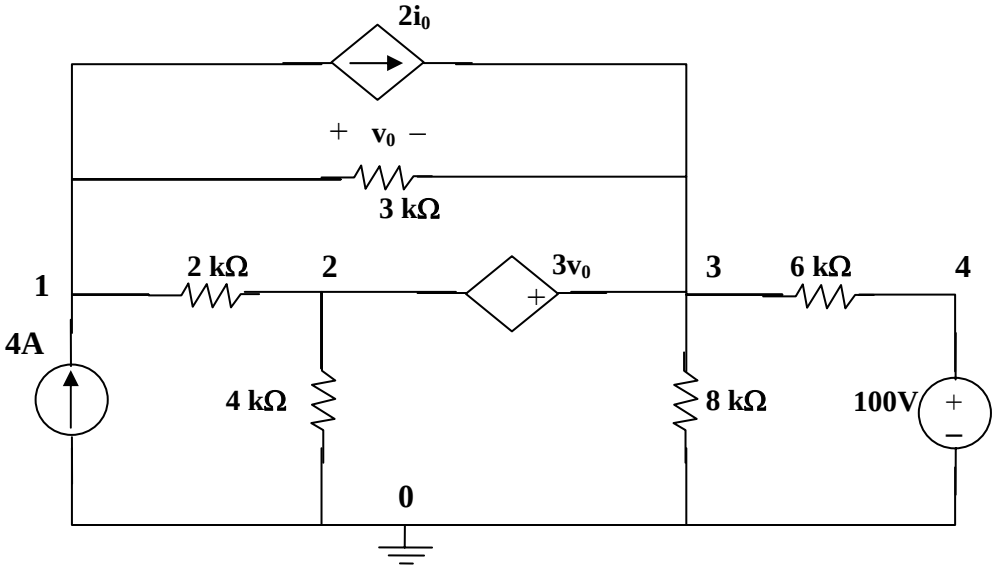

This network corresponds to the Netlist.

Chapter 3, Problem 83.

PROPRIETARY MATERIAL. © 2007 The McGraw-Hill Companies, Inc. All rights reserved. No part of this Manual may be displayed, reproduced or distributed in any form or by any means, without the prior written permission of the publisher, or used beyond the limited distribution to teachers and educators permitted by McGraw-Hill for their individual course preparation. If you are a student using this Manual, you are using it without permission.

The following program is the Schematics Netlist of a particular circuit. Draw the circuit and determine the voltage at node 2.

```
R_R1   1   2   20
R_R2   2   0   50
R_R3   2   3   70
R_R4   3   0   30
V_VS   1   0   20V
I_IS   2   0   DC    2A
```

Chapter 3, Solution 83

The circuit is shown below.

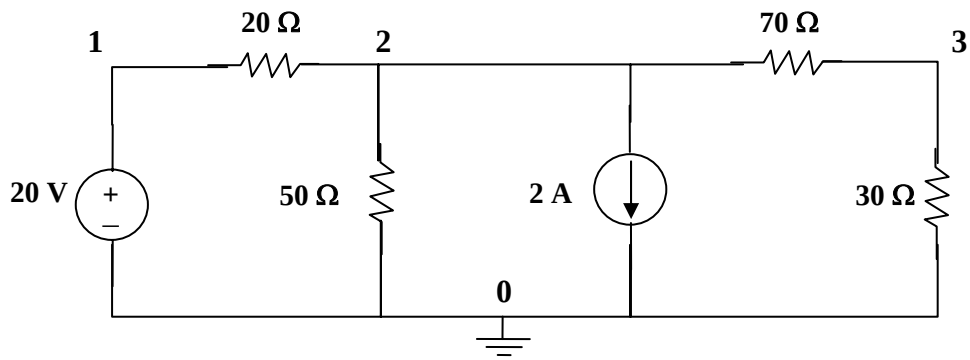

When the circuit is saved and simulated, we obtain v_2 = **<u>–12.5 volts</u>**

Chapter 3, Problem 84.

Calculate $\boldsymbol{v_o}$ and $\boldsymbol{i_o}$ in the circuit of Fig. 3.121.

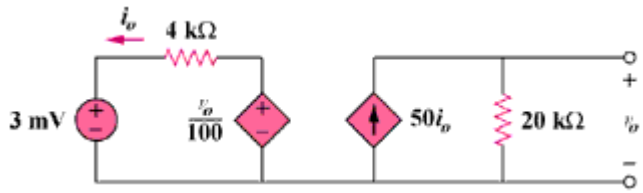

Figure 3.121

Chapter 3, Solution 84

From the output loop, $v_0 = 50i_0 x 20x10^3 = 10^6 i_0$ (1)
From the input loop, $3x10^{-3} + 4000i_0 - v_0/100 = 0$ (2)
From (1) and (2) we get, i_0 = **<u>0.5μA</u>** and v_0 = **<u>0.5 volt</u>**.

Chapter 3, Problem 85.

<u>PROPRIETARY MATERIAL</u>. © 2007 The McGraw-Hill Companies, Inc. All rights reserved. <u>No part of this Manual may be displayed, reproduced or distributed in any form or by any means, without the prior written permission of the publisher, or used beyond the limited distribution to teachers and educators permitted by McGraw-Hill for their individual course preparation. If you are a student using this Manual, you are using it without permission.</u>

An audio amplifier with resistance 9Ω supplies power to a speaker. In order that maximum power is delivered, what should be the resistance of the speaker?

Chapter 3, Solution 85

The amplifier acts as a source.

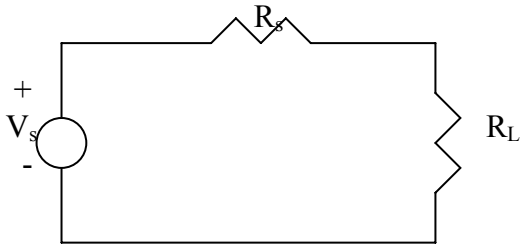

For maximum power transfer,

$$R_L = R_s = \underline{9\Omega}$$

Chapter 3, Problem 86.

For the simplified transistor circuit of Fig. 3.122, calculate the voltage $\boldsymbol{v_o}$.

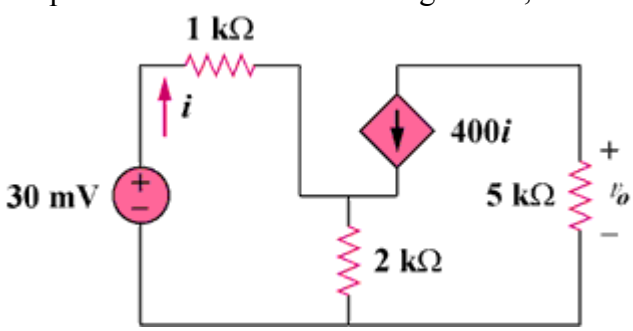

Figure 3.122

Chapter 3, Solution 86

Let v_1 be the potential across the 2 k-ohm resistor with plus being on top. Then,

$[(0.03 - v_1)/1k] + 400i = v_1/2k$ (1)

Assume that i is in mA. But, $i = (0.03 - v_1)/1$ (2)

Combining (1) and (2) yields,
$v_1 = 29.963$ mVolts and $i = 37.4$ nA, therefore,
$v_0 = -5000 \times 400 \times 37.4 \times 10^{-9} =$ **-74.8 mvolts**

Chapter 3, Problem 87.

For the circuit in Fig. 3.123, find the gain $\boldsymbol{v_o/v_s}$.

PROPRIETARY MATERIAL. © 2007 The McGraw-Hill Companies, Inc. All rights reserved. No part of this Manual may be displayed, reproduced or distributed in any form or by any means, without the prior written permission of the publisher, or used beyond the limited distribution to teachers and educators permitted by McGraw-Hill for their individual course preparation. If you are a student using this Manual, you are using it without permission.

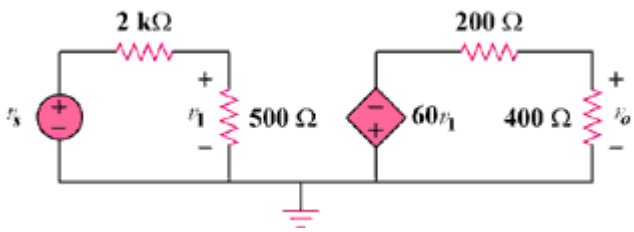

Figure 3.123

Chapter 3, Solution 87

$v_1 = 500(v_s)/(500 + 2000) = v_s/5$

$v_0 = -400(60v_1)/(400 + 2000) = -40v_1 = -40(v_s/5) = -8v_s,$

Therefore, $v_0/v_s =$ **<u>–8</u>**

Chapter 3, Problem 88.

Determine the gain $\boldsymbol{v_o/v_s}$ of the transistor amplifier circuit in Fig. 3.124.

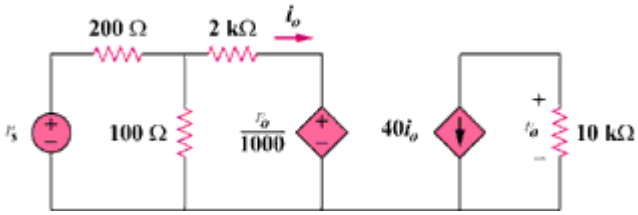

Figure 3.124

Chapter 3, Solution 88

Let v_1 be the potential at the top end of the 100-ohm resistor.

$$(v_s - v_1)/200 = v_1/100 + (v_1 - 10^{-3}v_0)/2000 \qquad (1)$$

For the right loop, $v_0 = -40i_0(10{,}000) = -40(v_1 - 10^{-3})10{,}000/2000,$

$$\text{or, } v_0 = -200v_1 + 0.2v_0 = -4\text{x}10^{-3}v_0 \qquad (2)$$

Substituting (2) into (1) gives, $(v_s + 0.004v_1)/2 = -0.004v_0 + (-0.004v_1 - 0.001v_0)/20$

This leads to $0.125v_0 = 10v_s$ or $(v_0/v_s) = 10/0.125 =$ **<u>-80</u>**

Chapter 3, Problem 89.

<u>PROPRIETARY MATERIAL</u>. © 2007 The McGraw-Hill Companies, Inc. All rights reserved. <u>No part of this Manual may be displayed, reproduced or distributed in any form or by any means, without the prior written permission of the publisher, or used beyond the limited distribution to teachers and educators permitted by McGraw-Hill for their individual course preparation. If you are a student using this Manual, you are using it without permission.</u>

For the transistor circuit shown in Fig. 3.125, find I_B and V_{CE}. Let $\beta = 100$ and $V_{BE} = 0.7V$.

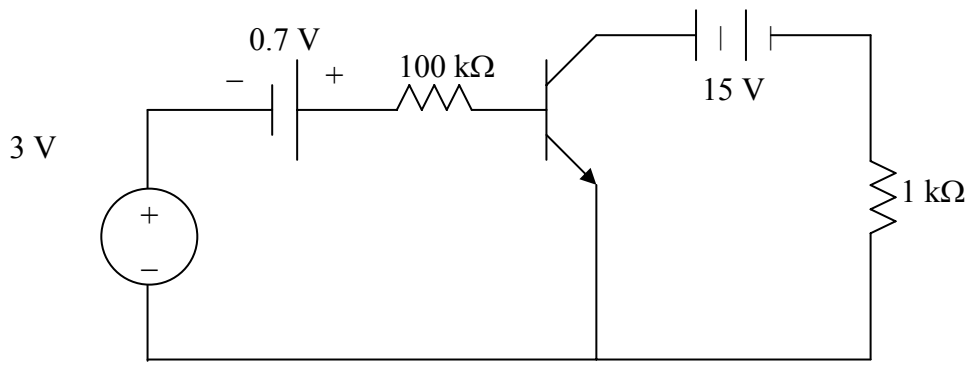

Figure 3.125 For Prob. 3.89.

Chapter 3, Solution 89

Consider the circuit below.

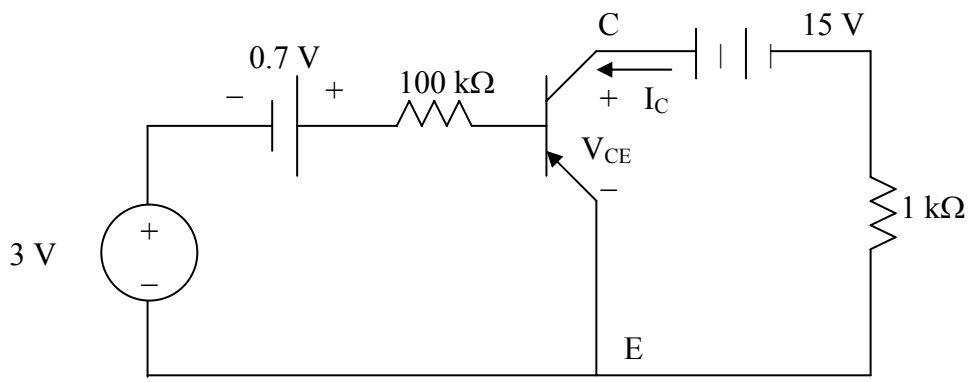

For the left loop, applying KVL gives

$$-3 - 0.7 + 100x10^3 I_B + V_{BE} = 0 \xrightarrow{V_{BE}=0.7} I_B = \underline{30\ \mu A}$$

For the right loop,

$$-V_{CE} + 15 - I_c(1x10^3) = 0$$

But $I_C = \beta I_B = 100x30\ \mu A = 3\ mA$

$$V_{CE} = 15 - 3x10^{-3}x10^3 = \underline{12\ V}$$

Chapter 3, Problem 90.

PROPRIETARY MATERIAL. © 2007 The McGraw-Hill Companies, Inc. All rights reserved. No part of this Manual may be displayed, reproduced or distributed in any form or by any means, without the prior written permission of the publisher, or used beyond the limited distribution to teachers and educators permitted by McGraw-Hill for their individual course preparation. If you are a student using this Manual, you are using it without permission.

Calculate v_s for the transistor in Fig. 3.126, given that $v_o = 4$ V, $\beta = 150$, $V_{BE} = 0.7$V.

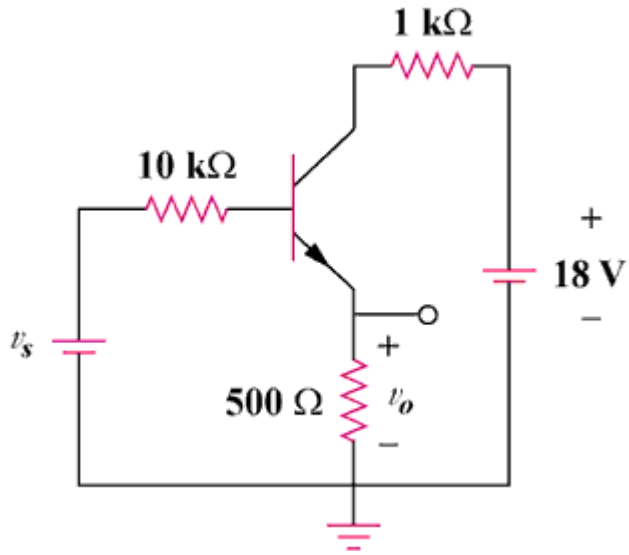

Figure 3.126

Chapter 3, Solution 90

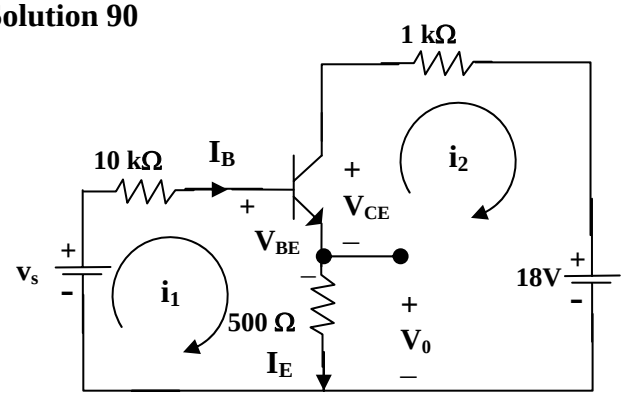

For loop 1, $-v_s + 10k(I_B) + V_{BE} + I_E\,(500) = 0 = -v_s + 0.7 + 10{,}000I_B + 500(1 + \beta)I_B$

which leads to $v_s + 0.7 = 10{,}000I_B + 500(151)I_B = 85{,}500I_B$

But, $v_0 = 500I_E = 500\text{x}151I_B = 4$ which leads to $I_B = 5.298\text{x}10^{-5}$

Therefore, $v_s = 0.7 + 85{,}500I_B =$ **5.23 volts**

Chapter 3, Problem 91.

PROPRIETARY MATERIAL. © 2007 The McGraw-Hill Companies, Inc. All rights reserved. No part of this Manual may be displayed, reproduced or distributed in any form or by any means, without the prior written permission of the publisher, or used beyond the limited distribution to teachers and educators permitted by McGraw-Hill for their individual course preparation. If you are a student using this Manual, you are using it without permission.

For the transistor circuit of Fig. 3.127, find $\boldsymbol{I_B}$, $\mathbf{V_{CE}}$, and $\boldsymbol{v_o}$. Take $\beta = 200$, $V_{BE} = 0.7V$.

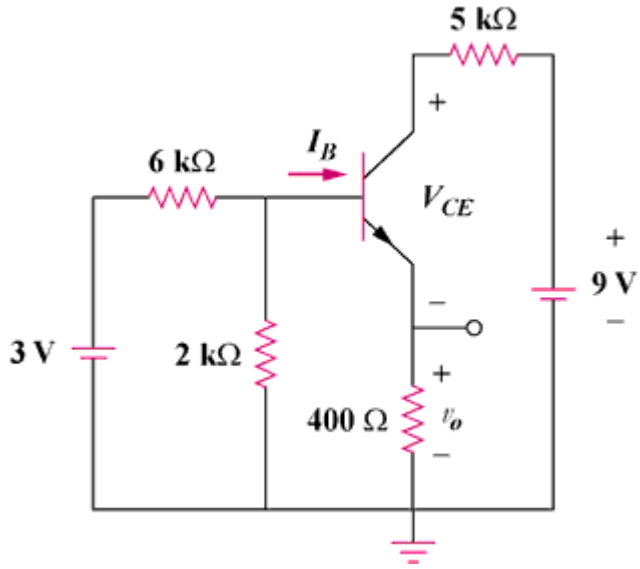

Figure 3.127

Chapter 3, Solution 91

We first determine the Thevenin equivalent for the input circuit.

$R_{Th} = 6||2 = 6x2/8 = 1.5\ k\Omega$ and $V_{Th} = 2(3)/(2+6) = 0.75$ volts

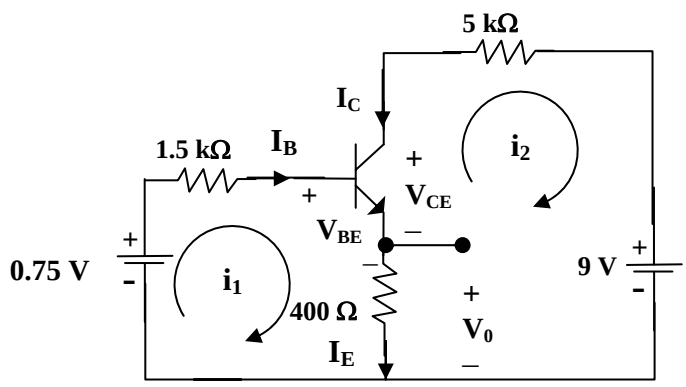

For loop 1, $-0.75 + 1.5kI_B + V_{BE} + 400I_E = 0 = -0.75 + 0.7 + 1500I_B + 400(1 + \beta)I_B$

$I_B = 0.05/81{,}900 =$ **<u>0.61 μA</u>**

$v_0 = 400I_E = 400(1 + \beta)I_B =$ **<u>49 mV</u>**

For loop 2, $-400I_E - V_{CE} - 5kI_C + 9 = 0$, but, $I_C = \beta I_B$ and $I_E = (1 + \beta)I_B$

$V_{CE} = 9 - 5k\beta I_B - 400(1 + \beta)I_B = 9 - 0.659 =$ **<u>8.641 volts</u>**

Chapter 3, Problem 92.

<u>PROPRIETARY MATERIAL</u>. © 2007 The McGraw-Hill Companies, Inc. All rights reserved. <u>No part of this Manual may be displayed, reproduced or distributed in any form or by any means, without the prior written permission of the publisher, or used beyond the limited distribution to teachers and educators permitted by McGraw-Hill for their individual course preparation. If you are a student using this Manual, you are using it without permission.</u>

Find $\boldsymbol{I_B}$ and $\mathbf{V_C}$ for the circuit in Fig. 3.128. Let $\beta = 100$, $V_{BE} = 0.7V$.

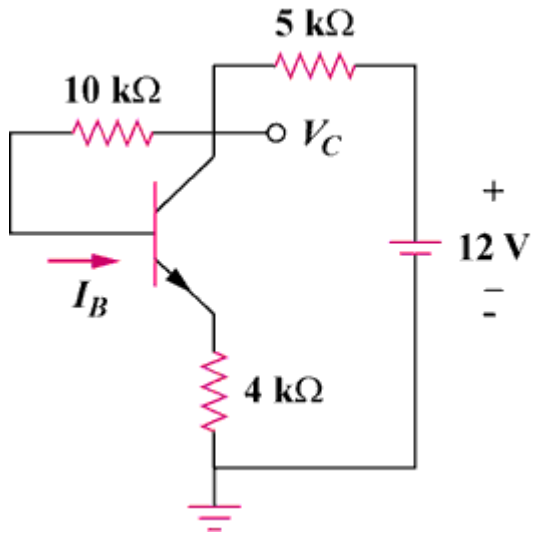

Figure 3.128

Chapter 3, Solution 92

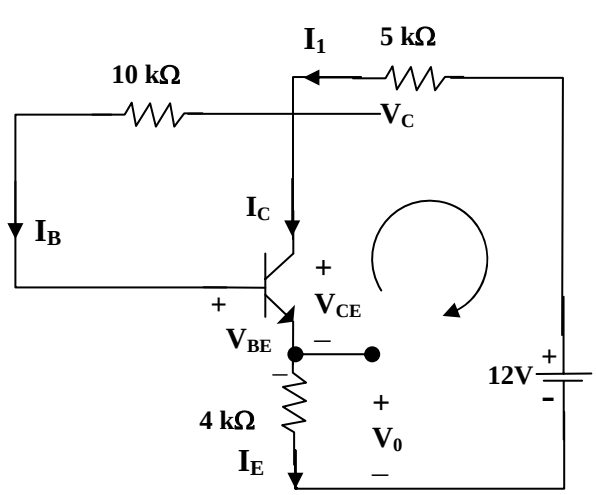

$$I_1 = I_B + I_C = (1 + \beta)I_B \quad \text{and} \quad I_E = I_B + I_C = I_1$$

Applying KVL around the outer loop,

$$4kI_E + V_{BE} + 10kI_B + 5kI_1 = 12$$

$$12 - 0.7 = 5k(1 + \beta)I_B + 10kI_B + 4k(1 + \beta)I_B = 919kI_B$$

$$I_B = 11.3/919k = 12.296\ \mu A$$

Also, $12 = 5kI_1 + V_C$ which leads to $V_C = 12 - 5k(101)I_B =$ **5.791 volts**

Chapter 3, Problem 93

Rework Example 3.11 with hand calculation.

PROPRIETARY MATERIAL. © 2007 The McGraw-Hill Companies, Inc. All rights reserved. No part of this Manual may be displayed, reproduced or distributed in any form or by any means, without the prior written permission of the publisher, or used beyond the limited distribution to teachers and educators permitted by McGraw-Hill for their individual course preparation. If you are a student using this Manual, you are using it without permission.

In the circuit in Fig. 3.34, determine the currents i_1, i_2, and i_3.

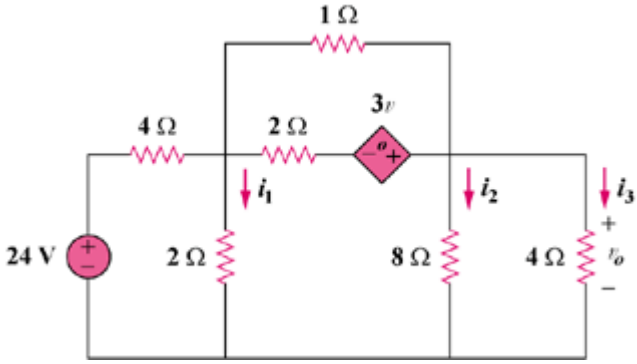

Figure 3.34

Chapter 3, Solution 93

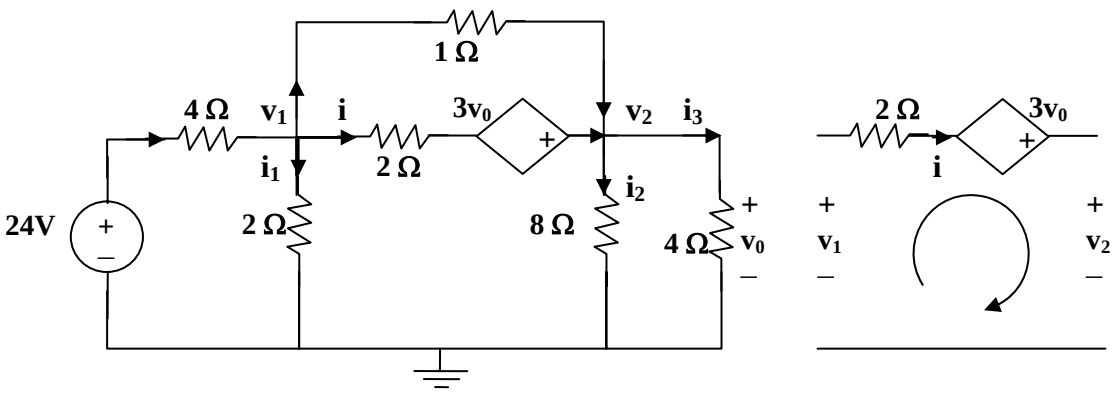

(a) **(b)**

From (b), $-v_1 + 2i - 3v_0 + v_2 = 0$ which leads to $i = (v_1 + 3v_0 - v_2)/2$

At node 1 in (a), $((24 - v_1)/4) = (v_1/2) + ((v_1 + 3v_0 - v_2)/2) + ((v_1 - v_2)/1)$, where $v_0 = v_2$

or $24 = 9v_1$ which leads to $v_1 =$ **2.667 volts**

At node 2, $((v_1 - v_2)/1) + ((v_1 + 3v_0 - v_2)/2) = (v_2/8) + v_2/4$, $v_0 = v_2$

$v_2 = 4v_1 =$ **10.66 volts**

Now we can solve for the currents, $i_1 = v_1/2 =$ **1.333 A**, $i_2 =$ **1.333 A**, and

$i_3 =$ **2.6667** A.

PROPRIETARY MATERIAL. © 2007 The McGraw-Hill Companies, Inc. All rights reserved. No part of this Manual may be displayed, reproduced or distributed in any form or by any means, without the prior written permission of the publisher, or used beyond the limited distribution to teachers and educators permitted by McGraw-Hill for their individual course preparation. If you are a student using this Manual, you are using it without permission.